D6 0.1 - 1%

6m³/h - 0.1 - 1%
26 GPM - 1:1000 - 1:100
0.3 - 8 bar
4.3 - 116 PSI

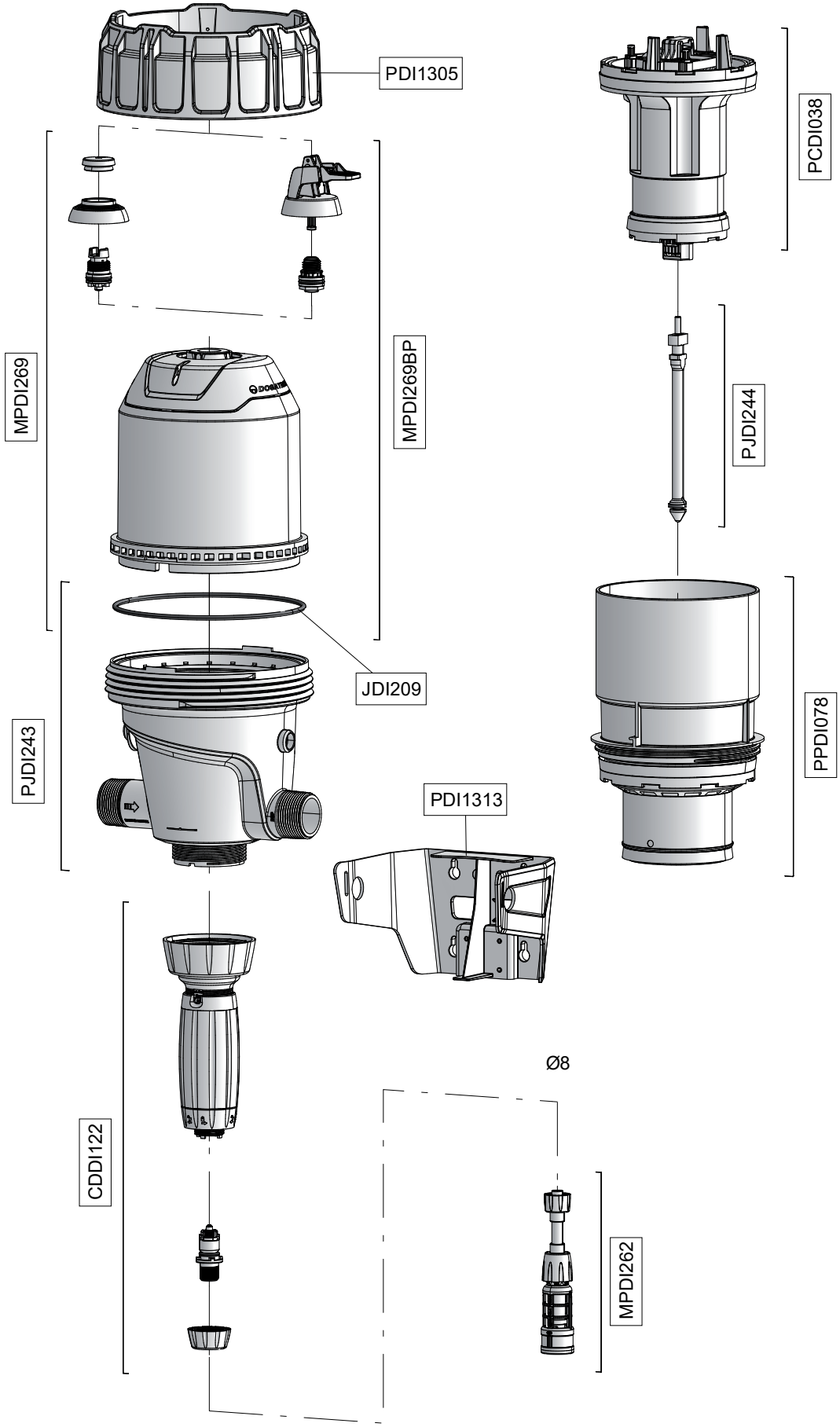

© DOSATRON INTERNATIONAL S.A.S. 2024
D6 0.1 - 1%/0824/U1

D6 0.1 - 1%

6m³/h - 0.1 - 1%
26 GPM - 1:1000 - 1:100
0.3 - 8 bar
4.3 - 116 PSI

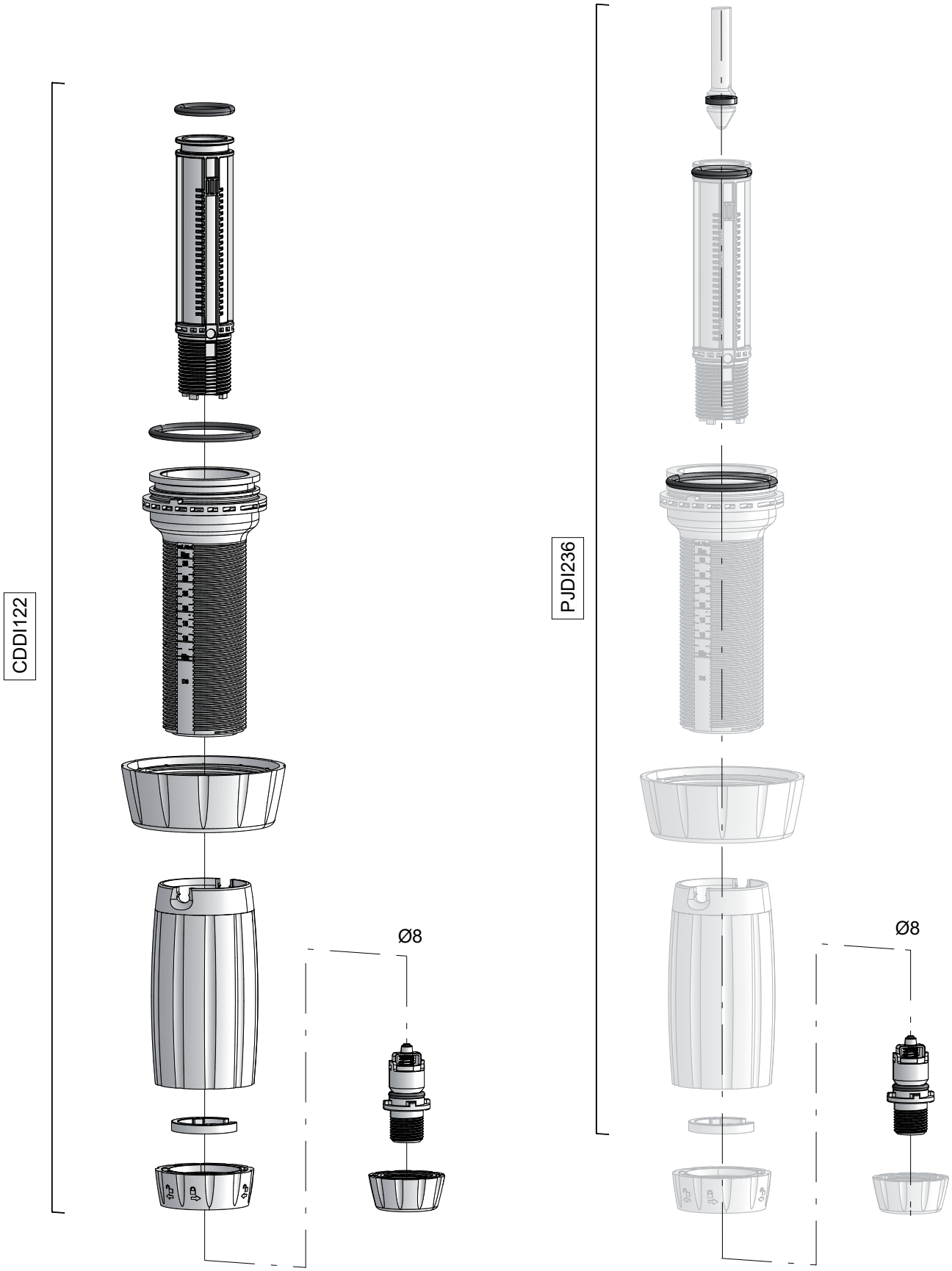

© DOSATRON INTERNATIONAL S.A.S. 2024
D6 0.1 - 1%/0824/U2