OPERATOR'S MANUAL 66610X-X-C

INCLUDING: OPERATION, INSTALLATION AND MAINTENANCE

RELEASED: 8-24-89
REVISED: 9-25-26
(REV: AT)

1" DIAPHRAGM PUMP
1:1 RATIO (METALLIC)

READ THIS MANUAL CAREFULLY BEFORE INSTALLING, OPERATING OR SERVICING THIS EQUIPMENT.

It is the responsibility of the employer to place this information in the hands of the operator. Keep for future reference.

SERVICE KITS

Refer to the Model Description Chart to match the pump material options.
637118-C for air section repair (see page 8).
637119-XXX-C for fluid section repair **with** seats (see page 5).
637119-XX-C for fluid section repair **without** seats (see page 5).
637167 Abrasion Resistant Conversion Kit is available for use in heavy and abrasive material applications (see page 5).

PUMP DATA

Models..... see "Model Description Chart" for "-XXX"
Pump Type..... Metallic Air Operated Double Diaphragm
Material..... see "Model Description Chart"
Weight
Aluminum ..... 19 lbs (8.62 kgs)
Cast Iron ..... 31 lbs (14.06 kgs)
Stainless Steel..... 28.95 lbs (13.13 kgs)
Stainless Steel Flange models.. 37.61 lbs (17.06 kgs)
[add 8 lbs (3.63 kgs) for cast iron air motor section]
Maximum Air Inlet Pressure ..... 120 psig (8.3 bar)
Maximum Material Inlet Pressure 10 psig (0.69 bar)
Maximum Outlet Pressure..... 120 psig (8.3 bar)
Maximum
Flow Rate (flooded inlet)..... 35 gpm (133 lpm)
Displacement / Cycle @ 100 psig
Standard Diaphragm ..... 0.16 gal. (0.60 lit.)
Composite PTFE Diaphragm .... 0.14 gal. (0.525 lit.)
Maximum Particle ..... Size1/8" dia. (3.2 mm)
Maximum Temperature Limits (diaphragm / ball / seat material)
Acetal ..... -20° to 180° F (-29° to 82° C)
E.P.R. / EPDM ..... -60° to 280° F (-51° to 138° C)
Hytrel® ..... -20° to 180° F (-29° to 82° C)
Neoprene ..... 0° to 200° F (-18° to 93° C)
Nitrile ..... 10° to 180° F (-12° to 82° C)
Polypropylene ..... 32° to 175° F (0° to 79° C)
Polyurethane ..... -10° to 150° F (-23° to 66° C)
PVDF..... 10° to 200° F (-12° to 93° C)
Santoprene® ..... -40° to 225° F (-40° to 107° C)
PTFE ..... 40° to 225° F (4° to 107° C)
Composite PTFE ..... 14° to 194° F (-10° to 90° C)
Viton® ..... -40° to 350° F (-40° to 177° C)
Dimensional Data..... see page 10, 11 and 12
Noise Level @ 70 psig, 60 cpm① .. 78.3 dB(A)②

① Tested with 93110 muffler installed.

② The pump sound pressure levels published here have been updated to an Equivalent Continuous Sound Level (LA_{eq}) to meet the intent of ANSI S1.13-1971, CAGI-PNEUROP S5.1 using four microphone locations.

6661XX-XXX-C
1" DIAPHRAGM PUMP

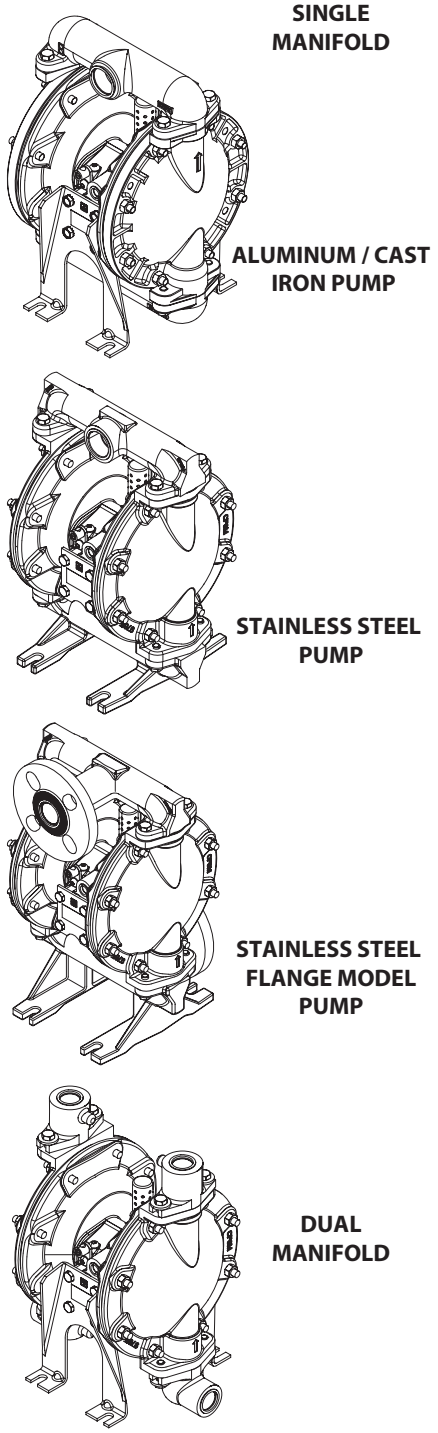

Figure 1

ARO
209 NORTH MAIN STREET - BRYAN, OHIO 43506
(800) 495-0276 • FAX (800) 892-6276
arozone.com
© 2026
CCN 81376642

ARO®

MODEL DESCRIPTION CHART

6661 X X - X X X - C

CENTER BODY MATERIAL

0 - Aluminum, NPTF
1 - Cast Iron, NPTF
2 - Aluminum, BSP
3 - Cast Iron, BSP
G - Aluminum, FLANGE

FLUID CAP / MANIFOLD MATERIAL

(Steel Hardware)
0 - Aluminum, Single
1 - Stainless Steel, Single
2 - Cast Iron, Single
9 - Stainless Steel, Dual
(Stainless Steel Hardware)
A - Aluminum, Single
B - Stainless Steel, Single
C - Cast Iron, Single
D - Stainless Steel, Dual
E - Stainless Steel, Raised Flange, Center Port

SEAT MATERIAL

1 - Aluminum
2 - 316 Stainless Steel
3 - Polypropylene
4 - PVDF
5 - Carbon Steel
8 - Hard 440 Stainless Steel

BALL MATERIAL

1 - Neoprene
2 - Nitrile
3 - Viton®
4 - PTFE
6 - Acetal
8 - Polyurethane
A - Stainless Steel
C - Hytrel
E - Santoprene

DIAPHRAGM MATERIAL

1 - Neoprene
2 - Nitrile
3 - Viton®
4 - PTFE / Santoprene
6 - Composite PTFE
9 - Hytrel
B - Santoprene

FLUID SECTION SERVICE KIT SELECTION

6661XX-X X X C

EXAMPLE: MODEL # 666100-361-C
Fluid Section Service Kit # 637119-61-C

637119 [X] [X] - C
BALL — DIAPHRAGM

NOTICE: All possible options are shown in the chart, however, certain combinations may not be recommended. Consult a representative or the factory if you have questions concerning availability.

OPERATING AND SAFETY PRECAUTIONS

READ, UNDERSTAND, AND FOLLOW THIS INFORMATION TO AVOID INJURY AND PROPERTY DAMAGE.

⚠ WARNING EXCESSIVE AIR PRESSURE. Can cause personal injury, pump damage or property damage.

- Do not exceed the maximum inlet air pressure as stated on the pump model plate.
- Be sure material hoses and other components are able to withstand fluid pressures developed by this pump. Check all hoses for damage or wear. Be certain dispensing device is clean and in proper working condition.

⚠ WARNING STATIC SPARK. Can cause explosion resulting in severe injury or death. Ground pump and pumping system.

- Sparks can ignite flammable material and vapors.
- The pumping system and object being sprayed must be grounded when it is pumping, flushing, recirculating or spraying flammable materials such as paints, solvents, lacquers, etc. or used in a location where surrounding atmosphere is conducive to spontaneous combustion. Ground the dispensing valve or device, containers, hoses and any object to which material is being pumped.
- Use the pump grounding screw terminal provided. Use ARO part no. 66885-1 ground kit or connect a suitable ground wire (12 ga. minimum) to a good earth ground source.
- Secure pump, connections and all contact points to avoid vibration and generation of contact or static spark.
- Consult local building codes and electrical codes for specific grounding requirements.
- After grounding, periodically verify continuity of electrical path to ground. Test with an ohmmeter from each component (e.g. hoses, pump, clamps, container, spray gun, etc.) to ground to insure continuity:
  - For "intrinsically safe" applications: ohmmeter should show less than 1 ohm.
  - For "ordinary" applications: ohmmeter should show less than 5 ohms.
  - Pump components surface resistance: materials are generally considered conductive with resistance less than 1 X 10^6 ohms.
- Submerse the outlet hose end, dispensing valve or device in the material being dispensed if possible. (Avoid free streaming of material being dispensed.)
- Use hoses incorporating a static wire.
- Use proper ventilation.
- Keep inflammables away from heat, open flames and sparks.
- Keep containers closed when not in use

⚠ WARNING Pump exhaust may contain contaminants. Can cause severe injury. Pipe exhaust away from work area and personnel.

- In the event of a diaphragm rupture, material can be forced out of the air exhaust muffler.
- Pipe the exhaust to a safe remote location when pumping hazardous or inflammable materials.
- Use a grounded 3/8" minimum ID hose between the pump and the muffler.

⚠ WARNING HAZARDOUS PRESSURE. Can result in serious injury or property damage. Do not service or clean pump, hoses or dispensing valve while the system is pressurized.

- Disconnect air supply line and relieve pressure from the system by opening dispensing valve or device and / or carefully and slowly loosening and removing outlet hose or piping from pump.

⚠ WARNING HAZARDOUS MATERIALS. Can cause serious injury or property damage. Do not attempt to return a pump to the factory or service center that contains hazardous material. Safe handling practices must comply with local and national laws and safety code requirements.

- Obtain Material Safety Data Sheets on all materials from the supplier for proper handling instructions.

⚠ WARNING EXPLOSION HAZARD. Models containing aluminum wetted parts cannot be used with 1,1,1-trichloroethane, methylene chloride or other halogenated hydrocarbon solvents which may react and explode.

- Check pump motor section, fluid caps, manifolds and all wetted parts to assure compatibility before using with solvents of this type.

⚠ CAUTION Verify the chemical compatibility of the pump wetted parts and the substance being pumped, flushed or recirculated. Chemical compatibility may change with temperature and concentration of the chemical(s) within the substances being pumped, flushed or circulated. For specific fluid compatibility, consult the chemical manufacturer.

⚠ CAUTION Maximum temperatures are based on mechanical stress only. Certain chemicals will significantly reduce maximum safe operating temperature. Consult the chemical manufacturer for chemical compatibility and temperature limits. Refer to PUMP DATA on page 1 of this manual.

⚠ CAUTION Be certain all operators of this equipment have been trained for safe working practices, understand it's limitations, and wear safety goggles / equipment when required.

⚠ CAUTION Do not use the pump for the structural support of the piping system. Be certain the system components are properly supported to prevent stress on the pump parts.

- Suction and discharge connections should be flexible connections (such as hose), not rigid piped, and should be compatible with the substance being pumped.

⚠ CAUTION Prevent unnecessary damage to the pump. Do not allow pump to operate when out of material for long periods of time.

- Disconnect air line from pump when system sits idle for long periods of time.

⚠ CAUTION Use only genuine ARO replacement parts to assure compatible pressure rating and longest service life.

NOTICE Replacement warning labels are available upon request: "Static Spark" (93616-1) and "Diaphragm Rupture" (93122).

⚠ WARNING	=	**Hazards or unsafe practices which could result in severe personal injury, death or substantial property damage.**
⚠ CAUTION	=	**Hazards or unsafe practices which could result in minor personal injury, product or property damage.**
NOTICE	=	**Important installation, operation or maintenance information.**

GENERAL DESCRIPTION

The ARO diaphragm pump offers high volume delivery even at low air pressure and a broad range of material compatibility options available. Refer to the model and option chart. ARO pumps feature stall resistant design, modular air motor / fluid sections. Air operated double diaphragm pumps utilize a pressure differential in the air chambers to alternately create suction and positive fluid pressure in the fluid chambers, valve checks ensure a positive flow of fluid. Pump cycling will begin as air pressure is applied and it will continue to pump and keep up with the demand. It will build and maintain line pressure and will stop cycling once maximum line pressure is reached (dispensing device closed) and will resume pumping as needed.

AIR AND LUBE REQUIREMENTS

⚠ **WARNING** **EXCESSIVE AIR PRESSURE. Can cause personal injury, pump damage or property damage.**

- A filter capable of filtering out particles larger than 50 microns should be used on the air supply. There is no lubrication required other than the "O" ring lubricant which is applied during assembly or repair.
- If lubricated air is present, make sure that it is compatible with the "O" rings and seals in the air motor section of the pump.

OPERATING INSTRUCTIONS

- Always flush the pump with a solvent compatible with the material being pumped if the material being pumped is subject to "setting up" when not in use for a period of time.
- Disconnect the air supply from the pump if it is to be inactive for a few hours.
- The outlet material volume is governed not only by the air supply, but also by the material supply available at the inlet. The material supply tubing should not be too small or restrictive. Be sure not to use hose which might co lapse.
- When the diaphragm pump is used in a forced-feed (flooded inlet) situation, it is recommended that a "Check Valve" be installed at the air inlet.
- Secure the diaphragm pump legs to a suitable surface to ensure against damage by vibration.

MAINTENANCE

Refer to the part views and descriptions as provided on pages 5 through 9 for parts identification and service kit information.

- Certain ARO "Smart Parts" are indicated which should be available for fast repair and reduction of down time.
- Service kits are divided to service two separate diaphragm pump functions: 1. AIR SECTION, 2. FLUID SECTION. The FLUID SECTION is divided further to match typical part MATERIAL OPTIONS.
- Provide a clean work surface to protect sensitive internal moving parts from contamination from dirt and foreign matter during service disassembly and reassembly.
- Keep good records of service activity and include pump in preventive maintenance program.
- Before disassembling, empty captured material in the outlet manifold by turning the pump upside down to drain material from the pump.

FLUID SECTION DISASSEMBLY

1. Remove manifolds (16), (17) and (18).
2. Remove (22) balls, (19) "O" rings and (21) seats.
3. Remove (15) fluid caps.

NOTE: Only PTFE diaphragm models use a primary diaphragm (7) and a backup diaphragm (8). Refer to the auxiliary view in the Fluid Section Illustration.

For 6661XX-XX6-C:

4. Remove (7) diaphragm, (5) washers and (30) shims.

For other models:

4. Remove the (14) screws, (6) washers, (7) or (7 / 8) diaphragms and (5) washers.
5. Remove (3) "O" rings.

FLUID SECTION REASSEMBLY

- Reassemble in reverse order.
- Clean and inspect all parts. Replace worn or damaged parts with new parts as required.
- Lubricate (1) diaphragm rod and (2) "O" ring with Lubriplate® FML-2.
- Install (2) "O" ring on (1) diaphragm rod.

For 6661XX-XX6-C:

- Attach a regulated airline to the pump inlet; gradually increasing the air pressure (6-8 psi) to check which side of the pump with air blowing out, and then shut down the air supplier.
- Fasten (7) diaphragm with (5) washer into (1) diaphragm rod, and insert them into (101) Center body from the chamber identified with blowing air in the previous step.
- Install (15) fluid cap.
- Thread the other side of (7) diaphragm with (5) washer into (1) diaphragm rod, but do not tighten it.
- Record the angle for the misalignment between (7) diaphragm hole and (101) center body holes, then unthread the (7) diaphragm and place proper Qty. of (30) shims between (5) washer and (1) diaphragm rod.
- Attach a regulated airline to the pump inlet, gradually increasing the air pressure (6-8 psi) until the diaphragm shift to the other site, shut down the air supply.
- Install the second (15) fluid cap.

NOTE: For details, refer to service kits manual 48495949.

For other models:

- Be certain (7) or (7 / 8) diaphragm(s) align properly with (15) fluid caps before making final torque adjustments on bolt and nuts to avoid twisting the diaphragm.
- For models with PTFE diaphragms: Item (8) Santoprene diaphragm is installed with the side marked "AIR SIDE" towards the pump center body. Install the PTFE diaphragm with the side marked "FLUID SIDE" towards the fluid cap.
- Re-check torque settings after pump has been re-started and run a while.

▪ Viton® is a registered trademarks of the Chemours Company ▪ Hytrel® is a registered trademark of the DuPont Company ▪ Loctite® is a registered trademark of Henkel Corporation ▪
▪ Santoprene® is a registered trademark of Celanese ▪ Lubriplate® es una marca registrada de Lubriplate Division (Fiske Brothers Refining Company) ▪

PARTS LIST / 66610X-X-C FLUID SECTION

Fluid Section Service Kits (637119-XXX-C OR 637119-XX-C)

For Fluid Kits With Seats:

★ 637119-XXX-C Fluid Section Service Kits include: Seats (see SEAT Option, refer to -XXX in chart below), Balls (see BALL Option, refer to -XXX in chart below), Diaphragms (see DIAPHRAGM Option, refer to -XXX in chart below), plus "O" ring items (2), (3) and (19) listed below plus 94276 Lubriplate® FML-2 (see page 8).

For Fluid Kits Without Seats:

★ 637119-XX-C Fluid Section Service Kits include: Balls (see BALL Option, refer to -XX in chart below), Diaphragms (see DIAPHRAGM Option, refer to -XX in chart below), plus "O" ring items (2), (3) and (19) listed below plus 94276 Lubriplate® FML-2 (see page 8).

SEAT OPTIONS 6661XX-XXX-C

★"21"			
-XXX	Seat	Qty	[Mtl]
-1XX	92008-1	(4)	[A]
-2XX	90428-1	(4)	[SS]
-3XX	92926	(4)	[P]
-4XX	92941	(4)	[K]
-5XX	95675-1	(4)	[C]
-8XX	93367-1	(4)	[SH]

BALL OPTIONS 6661XX-XXX-C

★ "22" (1-" dia.) (Service Kit - XX)							
-XXX	Ball	Qty	[Mtl]		-XXX	Ball	Qty	[Mtl]
-X1X	90532-1	(4)	[N]		-XAX	90948	(4)	[SS]
-X2X	90532-2	(4)	[B]		-XCX	90532-C	(4)	[H]
-X3X	90532-3	(4)	[V]		-XEX	90532-A	(4)	[Sp]
-X4X	90532-4	(4)	[T]					
-X6X	90532-6	(4)	[D]					
-X8X	90532-8	(4)	[U]					

MATERIAL CODE

[A] = Aluminum
[B] = Nitrile
[C] = Carbon Steel
[CI] = Cast Iron
[Co] = Copper
[CP] = Composite PTFE
[D] = Acetal
[E] = E.P.R.
[H] = Hytrel
[K] = PVDF
[N] = Neoprene
[P] = Polypropylene
[SP]= Santoprene
[SH] = Hard Stainless Steel
[SS] = Stainless Steel
[T] = PTFE
[V] = Viton

637167
ABRASION RESISTANT CONVERSION KIT INCLUDE
"21" Seat 93367-1 (4)
"22" Ball 90532-8 (4)

HARDWARE OPTIONS 6661XX-XXX-C

			Carbon Steel 6661X0-, 1-, 2-, 9-		Stainless Steel 6661XA-, B-, C-, D-, E-	
Item	Description (size)	Qty	Part No.	[Mtl]	Part No.	[Mtl]
24	Washer - (models 6661X9 and 6661XD only (5/16"))	(8)	Y13-5-C	[C]	Y13-5-T	[SS]
26	Bolt (5/16" -18 x1")	(8)	Y6-55-C	[C]	Y6-55-T	[SS]
29	Nut (5/16" -18)	(16)	Y12-5-C	[C]	Y12-5-S	[SS]

DIAPHRAGM OPTIONS 66610X-XXX-C

-XXX	★ For Service Kits With Seats -XXX = (Seat), -XXX = (Ball) -XXX = (Diaphragm)	★ For Service Kits Without Seats -XX = (Ball), -XX = (Diaphragm)	★ "7"			★ "8"			★ "3"			★ "19"		
			Diaphragm	[Qty]	[Mtl]	Diaphragm	[Qty]	[Mtl]	"O" Ring 1/16" x 5/8" OD	[Qty]	[Mtl]	"O" Ring 3/32" x 1-9/16" OD	[Qty]	[Mtl]
-XX1	637119-XX1-C	637119-X1-C	90533-1	(2)	[N]	-----	---	---	Y325-14	(4)	[B]	Y325-126	(4)	[B]
-XX2	637119-XX2-C	637119-X2-C	90533-2	(2)	[B]	-----	---	---	Y325-14	(4)	[B]	Y325-126	(4)	[B]
-XX3	637119-XX3-C	637119-X3-C	90533-3	(2)	[V]	-----	---	---	Y328-14	(4)	[T]	Y327-126	(4)	[V]
-XX4	637119-XX4-C	637119-X4-C	93459-4	(2)	[T]	92973-B	(2)	[SP]	Y328-14	(4)	[T]	Y328-126	(4)	[T]
-XX6	-----	48495964✦	48490056	(2)	[CP]	-----	---	---	------	----	---	Y328-126	(4)	[T]
-XX9	637119-XX9-C	637119-X9-C	90533-9	(2)	[H]	-----	---	---	Y328-14	(4)	[T]	Y327-126	(4)	[V]
-XXB	637119-XXB-C	637119-XB-C	90533-B	(2)	[SP]	-----	---	---	Y328-14	(4)	[T]	90534	(4)	[E]

MANIFOLD / FLUID CAP MATERIAL OPTIONS 6661XX-XXX-C

			Aluminum 6661X0-X, 6661XA-X			Stainless Steel 6661X1-, 1X9-, 1XB-, 1XD-, 1GE-				Cast Iron 6661X2-X, 6661XC-X		
Item	Description (Size)	Qty	NPTF Part No.	BSP Part No.	[Mtl]	NPTF Part No.	BSP Part No.	Flange Model Part No.	[Mtl]	NPTF. Part No.	BSP Part No.	[Mtl]
15	Fluid Cap	(2)	94945	94945	[A]	97615	97615	97615	[SS]	94277	94277	[CI]
16	Manifold (6661X0, 1X2, 1XA, 1XC)	(2)	92001	92001-1	[A]	-----	-----	-----	---	94278	94278-1	[CI]
17	Outlet Manifold (6661X9-, 6661XD- only)	(2)	-----	-----	---	92846	92846-1	-----	[SS]	-----	-----	---
18	Inlet Manifold (6661X9-, 6661XD- only)	(2)	-----	-----	---	92847	92847-1	-----	[SS]	-----	-----	---
23	Spring (6661X9-, 6661XD- only)	(2)	-----	-----	---	22155	22155	-----	[SS]	-----	-----	---
60	Inlet Manifold (6661X1, 6661XB, 6661GE Only)	(1)	-----	-----	---	97617	97617-1	98339	[SS]	-----	-----	---
61	Outlet Manifold (6661X1, 6661XB, 6661GE Only)	(1)	-----	-----	---	97616	97616-1	98340	[SS]	-----	-----	---

COMMON PARTS

Item	Description (size in inches)	Qty	Part No.	[Mtl]
☐ 1	Rod (6661XX-XX6-C)	(1)	48489660	[C]
	(other models)	(1)	98724-1	[C]
★ 2	"O" Ring (3/32" x 3/4" OD) ☆	(1)	Y330-113	[B]
☐ 5	Washer - Air Side (3-5/8" OD)	(2)	93441-2	[C]
☐ 6	Washer - Fluid Side *	(2)	93441-1	[SS]
	(models 661X0 and 6661X2 only)	(2)	93441-2	[C]

Item	Description (size in inches)	Qty	Part No.	[Mtl]
9	Washer (0.505" ID) *	(2)	93189-1	[SS]
14	Screw (1/2 " 20 x 1") *	(2)	Y5-85-T	[SS]
30	Shim (6661XX-XX6-C)	(♦)	48499362 #	[C]
43	Ground Lug (see page 9)	(1)	93004	[Co]

☆ Service Note: Fluid Section Service Kits also include part no. 93131 (5) "O" rings for repair of "-B" (pre - 8/89) models. * For 6661XX-XX6-C, on the fluid side, washer (6), (9) and screw (14) are not needed.

☐ "Smart Parts", keep these items on hand in addition to the service kits for fast repair and reduction of down time. ♦ The quantity is between 0 to 5, shims are not shown in the exploded view.

For service, shim pack 48499222 can be purchased. Refer to service kits manual 48495949 for details. ✦ Please note that 48495964 is a conversion kit, not a service kit. Its purpose is to convert a standard pump to a one-piece diaphragm pump, and it does not include the balls, seats, or Y328-126 O-ring. Please refer to Manual 48495949 for additional details.

COLOR CODE

MATERIAL	DIAPHRAGM COLOR	BALL COLOR
Acetal	N/A	Orange
Nitrile	Red (–)	Red (•)
Hytrel	Cream	Cream
Neoprene	Green (–)	Green (•)
Santoprene	Cream ★	Cream
PTFE	White	White
Urethane	N/A	Red
Viton	Yellow (–) (–) Stripe	Yellow (•) (•) Dot

★ See item 8 in inset below.

☞ TORQUE REQUIREMENTS ☜

NOTE: DO NOT OVERTIGHTEN FASTENERS

(14) Bolt, 25 - 30 ft lbs (33.9 - 40.7 Nm).

(26) Bolts and (29) nuts, 120 - 140 in. lbs (13.6 - 15.8 Nm).

(105) 40 - 50 in. lbs (4.5 - 5.6 Nm).

LUBRICATION / SEALANTS

- ◆ **Apply Loctite 271 to threads.**
- ★ **Apply Lubriplate® FML-2 (94276) to all "O" rings, "U" Cups & mating parts.**
- ❖ **Apply anti-seize compound to threads and bolt and nut flange heads which contact pump case when using stainless steel fasteners.**

○ **NOTE: Radius edge of parts (5 and 6) is against diaphragm.**

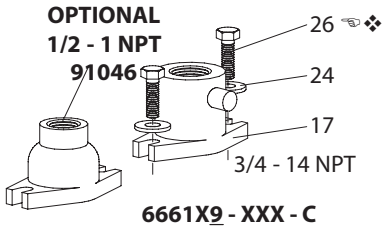

6661X9 - XXX - C
6661XD - XXX - C

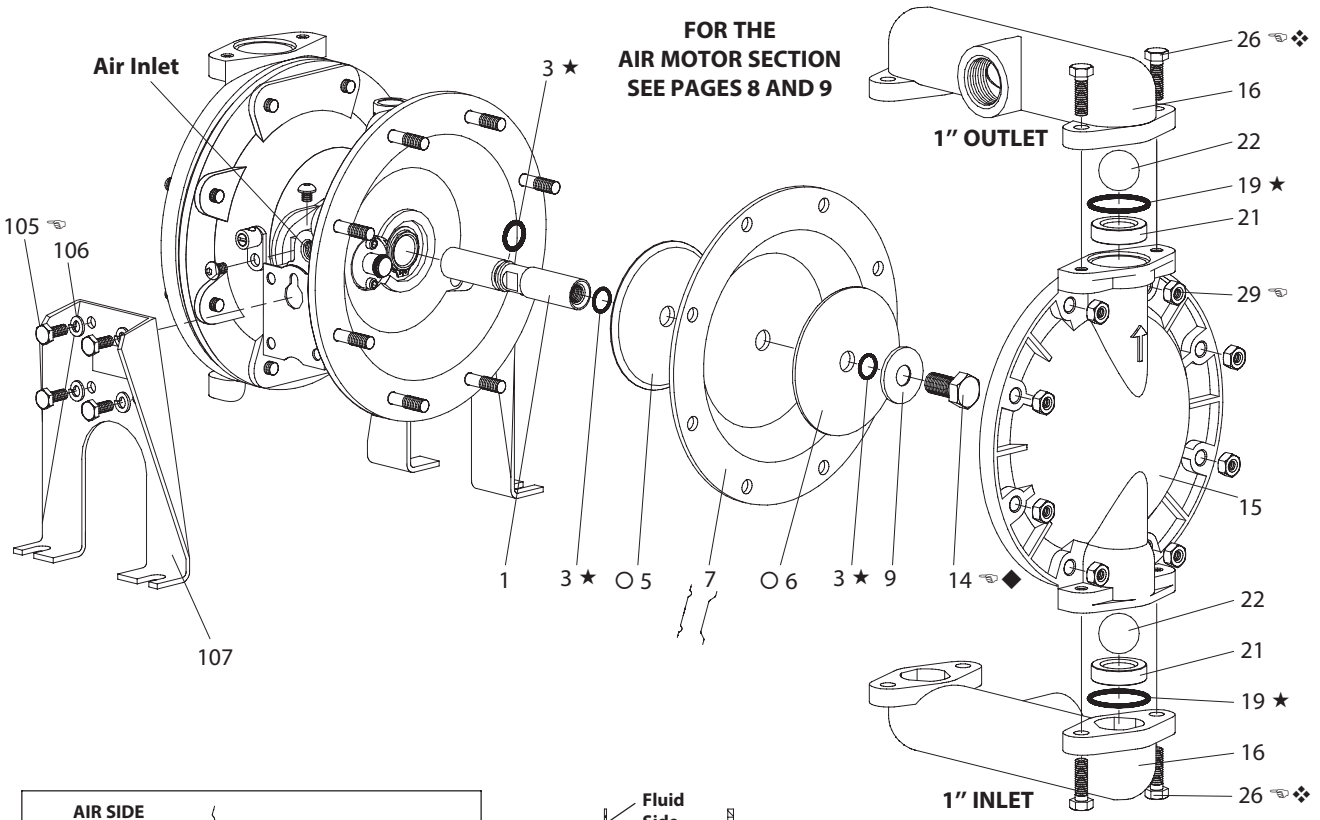

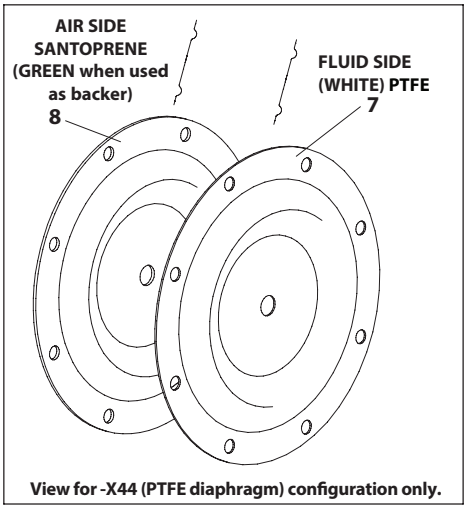

View for -X44 (PTFE diaphragm) configuration only.

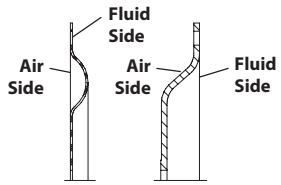

Cross Section View of Diaphragms

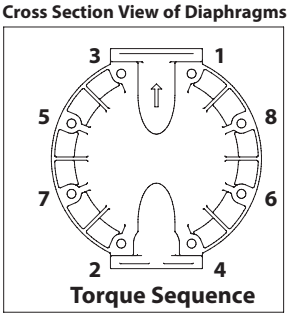

Torque Sequence

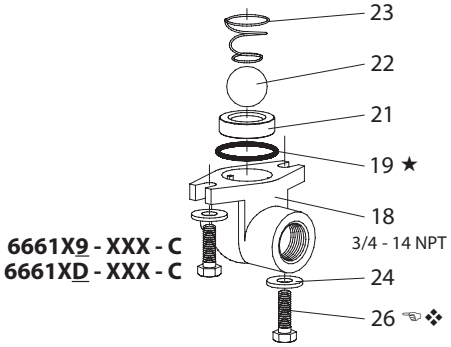

6661X9 - XXX - C
6661XD - XXX - C

Figure 2

COLOR CODE		
MATERIAL	DIAPHRAGM COLOR	BALL COLOR
Acetal	N/A	Orange
Nitrile	Red (–)	Red (•)
Hytrel	Cream	Cream
Neoprene	Green (–)	Green (•)
Santoprene	Cream★	Cream
PTFE	White	White
Urethane	N/A	Red
Viton	Yellow (–) (–) Stripe	Yellow (•) (•) Dot

★ See item 8 in inset below.

☞ TORQUE REQUIREMENTS ☜

NOTE: DO NOT OVERTIGHTEN FASTENERS

(14) Bolt, 25 - 30 ft lbs (33.9 - 40.7 Nm).
(26) Bolts and (29) nuts, 120 - 140 in. lbs (13.6 - 15.8 Nm).
(105) 40 - 50 in. lbs (4.5 - 5.6 Nm).

LUBRICATION / SEALANTS

◆ **Apply Loctite 271 to threads.**
★ **Apply Lubriplate® FML-2 (94276) to all "O" rings, "U" Cups & mating parts.**
❖ **Apply anti-seize compound to threads and bolt and nut flange heads which contact pump case when using stainless steel fasteners.**

○ **NOTE: Radius edge of parts (5 and 6) is against diaphragm.**

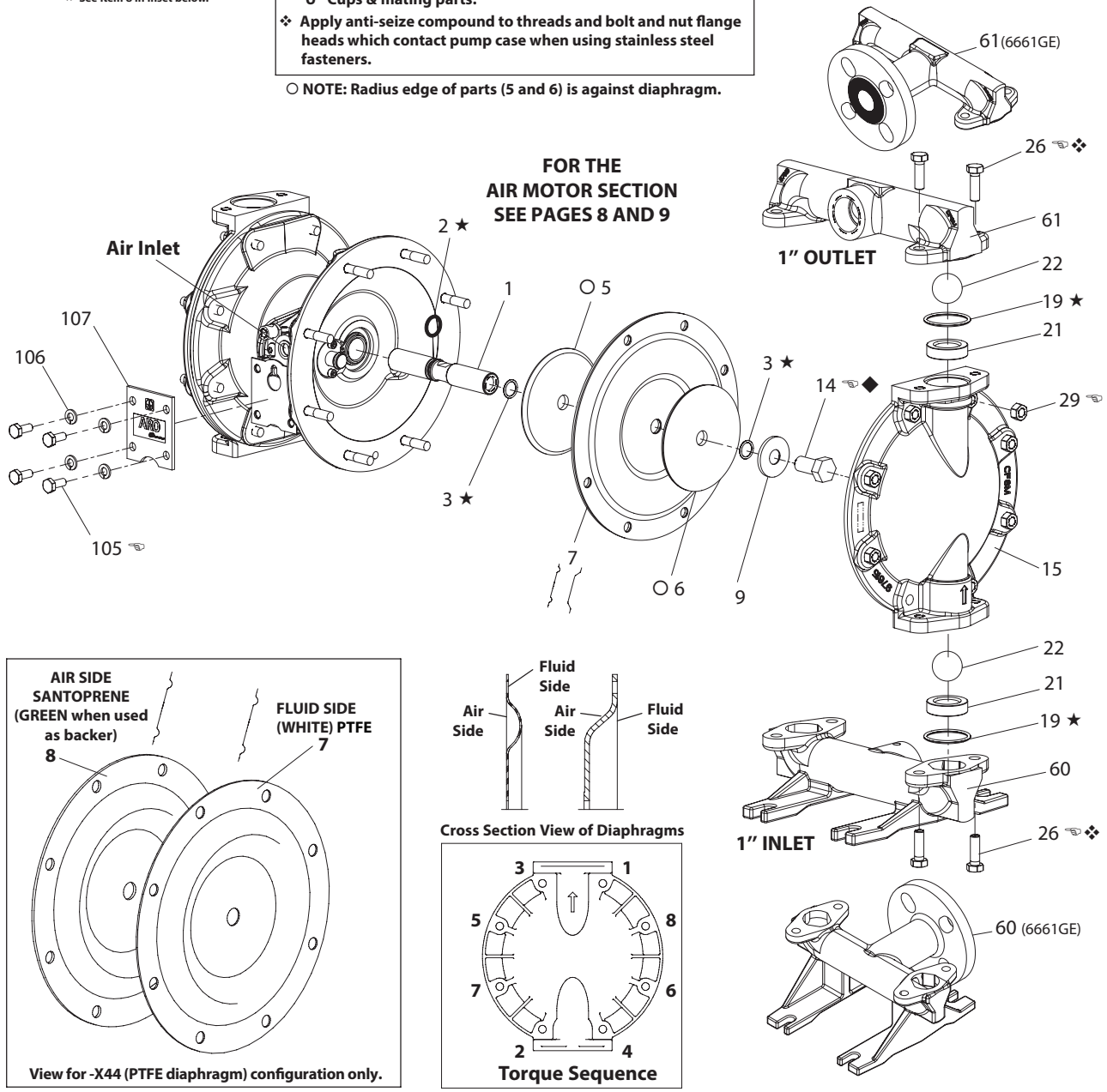

View for -X44 (PTFE diaphragm) configuration only.

Figure 3

PARTS LIST / 66610X-X-C AIR MOTOR SECTION

✓ Indicates parts included in 637118-C Air Section Service Kit.
SERVICE KIT NOTE: Service Kit 637118-C is a general repair kit for all 1" and larger ARO diaphragm pump air motors. It contains extra "O" Rings and other parts that may not be needed to service this model.

Item	Description (size)	Qty	Part No.	[Mtl]
101	Motor Body (models 66610X, 66612X, 6661GX)	(1)	98358-2	[A]
	(models 66611X, 66613X)	(1)	94741	[CI]
✓ 102	"O" Ring (1/16" x 1" OD)	(2)	Y325-20	[B]
☐ 103	Sleeve	(1)	94527	[D]
✓ 104	Retaining Ring, TruArc (.925" ID)	(2)	Y145-25	[C]
105	Screw/Wshr(1/4"-20 x 5/8") (-XX0, 1, 2, 9)	(8)	93860	[C]
	Cap Screw (1/4"-20 x 5/8") (-XXA, B, C, D, E)	(8)	Y6-42-T	[SS]
106	Lockwasher (1/4") (6661XA, 1XB,1XC, 1XD, 1GE)	(8)	Y14-416-T	[SS]
107	Leg (models 6661X0, 1X2, 1X9)	(2)	92003	[C]
	(models 6661XA, 1XC, 1XD)	(2)	92003-1	[SS]
107	Plate (models 6661X1, 1XB, 1GE)	(2)	93707-1	[SS]
✓ 108	Gasket (with notch)	(1)	92878	[B/Ny]
☐ 109	Piston	(1)	92011	[D]
✓ 110	"U" Cup (3/16" x 1-3/8" OD)	(1)	Y186-51	[B]
☐ 111	Spool (models 66610X, 12X, 1GX)	(1)	92005	[A]
	(models 66611X, 66613X)	(1)	93047	[C]
☐ 112	Washer (1.557" OD)	(5)	92877	[Z]
✓ 113	"O" Ring (1/8" x 1-1/4" OD)	(5)	Y325-214	[B]
✓ 114	"O" Ring (3/32" x 1-9/16" OD)	(6)	Y325-126	[B]
☐ 115	Spacer	(4)	92876	[Z]
☐ 116	Spacer	(1)	92006	[Z]

Item	Description (size)	Qty	Part No.	[Mtl]
✓ 117	Gasket	(1)	92004	[B/Ny]
118	Pilot Rod	(1)	93309-1	[C]
✓ 119	"O" Ring (1/8" x 3/4" OD)	(4)	93075	[U]
120	Spacer	(3)	115959	[Z]
121	Sleeve Bushing	(2)	98723-1	[Bz]
✓ 122	"O" Ring (3/32" x 9/16" OD)	(2)	94820	[U]
✓ 123	Screw (#8 - 32 x 3/8")	(4)	Y154-41	[C]
124	Stud (5/16" - 18 x 1-3/4") (6661X0, 1X1, 1X2, 1X9)	(16)	92866	[C]
	(5/16" - 18 x 1-3/4") (6661XA, 1XB, 1XC, 1XD, 1GE)	(16)	92866-1	[SS]
128	Pipe Plug (1/8 - 27 NPT x 1/4")	(1)	Y227-2-L	[C]
195A	Button Head Screw (1/4" - 20 x 1/4")	(2)	94987	[SS]
195B	Button Head Screw (1/4" - 20 x 3/8")	(1)	94987-1	[SS]
201	Muffler	(1)	93110	[C]
✓	Lubriplate® FML-2	(1)	94276	
	Lubriplate® Grease Packets (10)		637308	
✓	Service Kits include: Y212-101 (2) Screws (#10 - 32 x 1/4") used on units manufactured between 8/90 and 4/92 to retain the pilot bushing.			

✓ Parts Y145-26 (1.156" ID) (qty 2) retaining rings and Y325-24 "O" rings (qty 2) are included in the service Kit for the repair of larger pumps.
☐ "Smart Parts" Keep these items on hand in addition to the Service Kits for fast repair and reduction of down time.

AIR MOTOR SECTION SERVICE

Service is divided into two parts – 1. Pilot Valve, 2. Major Valve. GENERAL REASSEMBLY NOTES:

- Air Motor Section Service is continued from Fluid Section repair.
- Inspect and replace old parts with new parts as necessary. Look for deep scratches on metallic surfaces, and nicks or cuts in "O" rings.
- Take precautions to prevent cutting "O" rings upon installation.
- Lubricate "O" rings with Lubriplate® FML-2.
- Do not over tighten fasteners, refer to torque specification block on view.
- Re-torque fasteners following restart.

PILOT VALVE DISASSEMBLY

1. Remove (104) retaining ring.
2. Remove (123) screws and (122) "O" rings.
3. Remove (118) piston rod, (121) sleeve bushing, (119) "O" rings and (120) spacers from the (101) motor body.
4. Remove (103) sleeve and (102) "O" rings.

PILOT VALVE REASSEMBLY

1. Replace two (102) "O" rings if worn or damaged and reinstall (103) sleeve.
2. Install one of the (121) sleeve bushings, (119) "O" rings, (120) spacers and the remaining (121) bushing.
3. Carefully push (118) pilot rod into bushings etc. and retain on each end with the two (122) "O" rings, retain with (123) screws.
4. Replace (104) retaining rings.

MATERIAL CODE

[A] = Aluminum	[CI] = Cast Iron	[U] = Polyurethane
[B] = Nitrile	[D] = Acetal	[Z] = Zinc
[Bz] = Bronze	[NY] = Nylon	
[C] = Carbon Steel	[SS] = Stainless Steel	

MAJOR VALVE DISASSEMBLY

1. Remove (107) plate (or leg depending on model), (108 and 117) gaskets.
2. On the side opposite the air inlet, push on the inner diameter (111) spool. This will force the (109) piston out. Continue pushing the (111) spool and remove. Check for scratches and gouges.
3. Reach into the air section (exhaust side) and remove (116) spacer, (115) spacers, (113) "O" rings, (114) "O" rings, (112) washers, etc. Check for damaged "O" rings.

MAJOR VALVE REASSEMBLY

1. Replace (112) washer, (114) "O" ring and (113) "O" ring onto (115) spacer and insert etc.
   NOTE: Be careful to orient spacer legs away from blocking internal ports.
2. Lubricate and carefully insert (111) spool.
3. Install (117) gasket and (107).
4. Lubricate and install (110) packing cup and insert (109) piston into (air inlet side) cavity, the (110) packing cup lips should point outward.
5. Install (108) gasket and (107).

IMPORTANT

BE CERTAIN TO ORIENT (115) SPACER LEGS AWAY FROM BLOCKING INTERNAL PORTS WHEN REASSEMBLING AIR SECTION.

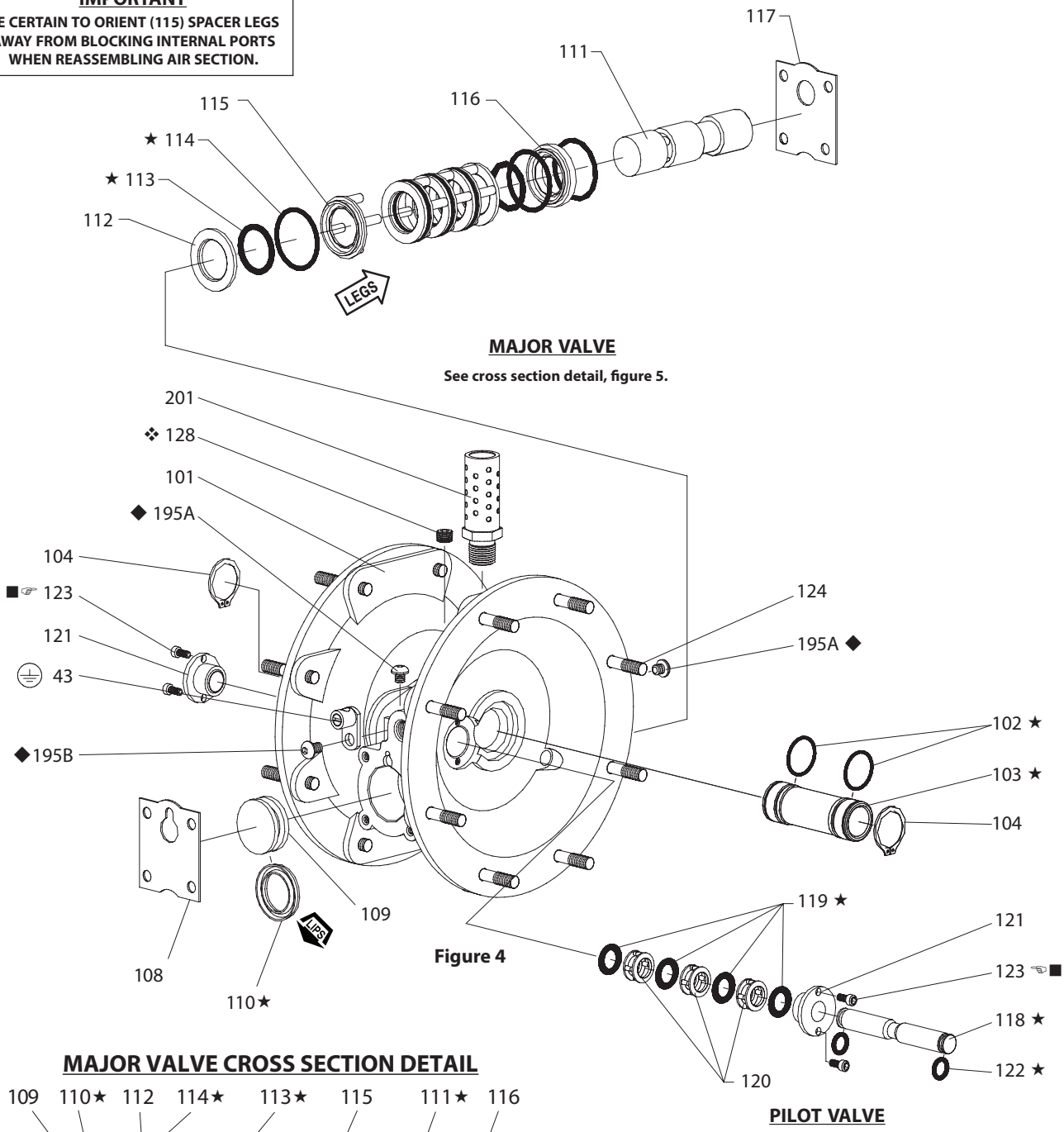

Figure 4

MAJOR VALVE CROSS SECTION DETAIL

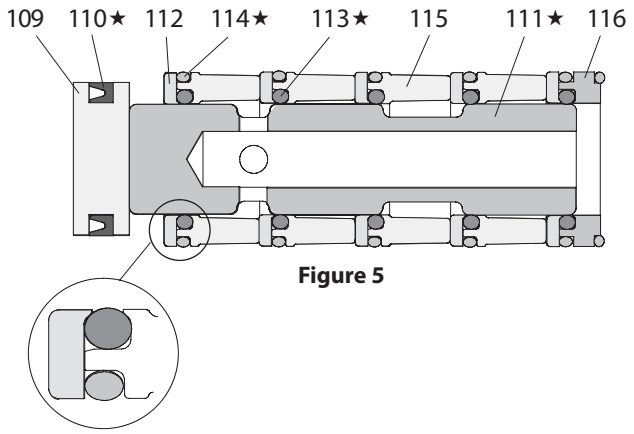

Figure 5

☞ TORQUE REQUIREMENTS ☜

NOTE: DO NOT OVERTIGHTEN FASTENERS.

(123) Screw, 20 -25 in. lbs (2.3 - 2.8 Nm).

LUBRICATION / SEALANTS

- ★ Apply Lubriplate® FML-2 (94276) to all "O" rings, "U" Cups andmating parts.
- ◆ Apply Loctite 271 to threads.
- ■ Apply Loctite 262 to threads.
- ❖ Apply Loctite 572 to threads.

TROUBLE SHOOTING

Product discharged from exhaust outlet.
- Check for diaphragm rupture.
- Check tightness of diaphragm nut (14).

Air bubbles in product discharge.
- Check connections of suction plumbing.
- Check "O" rings between intake manifold and fluid caps.
- Check tightness of diaphragm nut (14).

Low output volume, erratic flow, or no flow.
- Check air supply.
- Check for plugged outlet hose.
- Check for kinked (restrictive) outlet material hose.
- Check for kinked (restrictive) or collapsed inlet material hose.
- Check for pump cavitation – suction pipe should be sized at least as large as the inlet thread diameter of the pump for proper flow if high viscosity fluids are being pumped. Suction hose must be a non-collapsing type, capable of pulling a high vacuum.
- Check all joints on the inlet manifolds and suction connections. These must be air tight.
- Inspect the pump for solid objects lodged in the diaphragm chamber or the seat area.

DIMENSIONAL DATA- 6661X0, 1XA, 1X2 and 1XC

Dimensions shown are for reference only, they are displayed in inches and millimeters (mm).

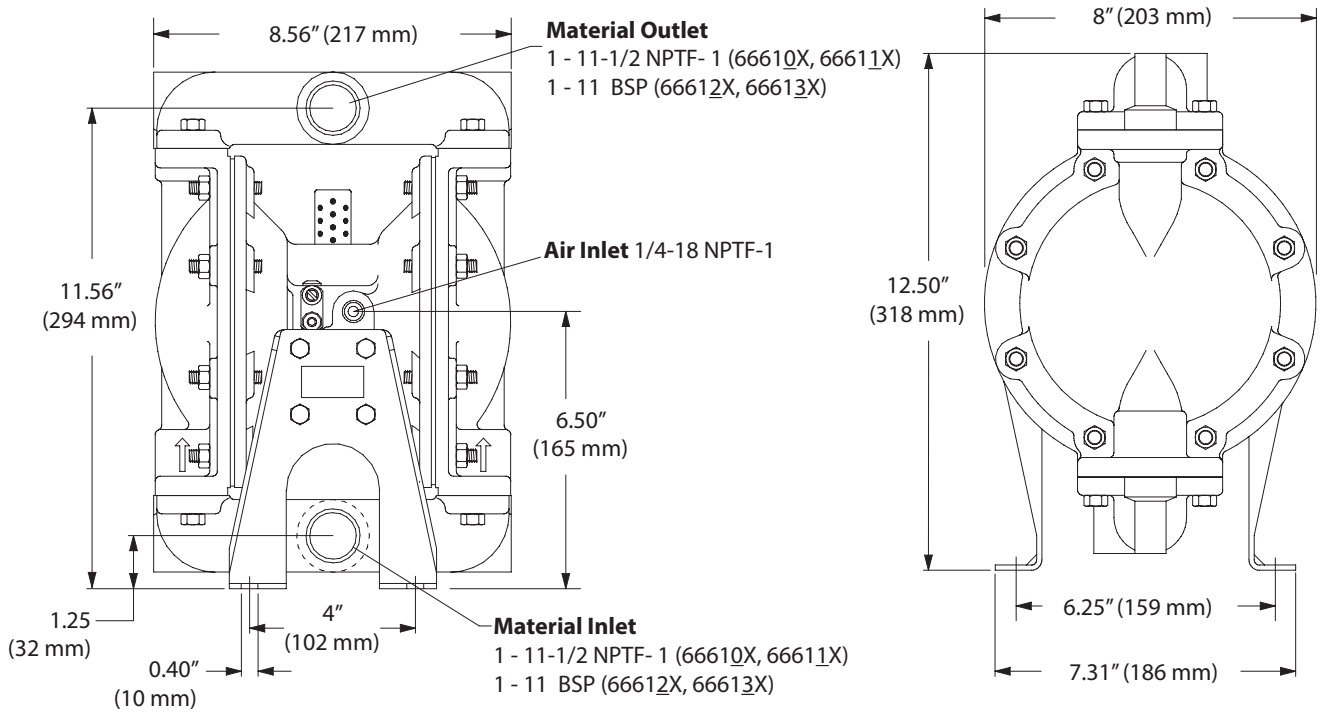

Figure 6

DIMENSIONAL DATA - 6661X1, 6661XB

Dimensions shown are for reference only, they are displayed in inches and millimeters (mm).

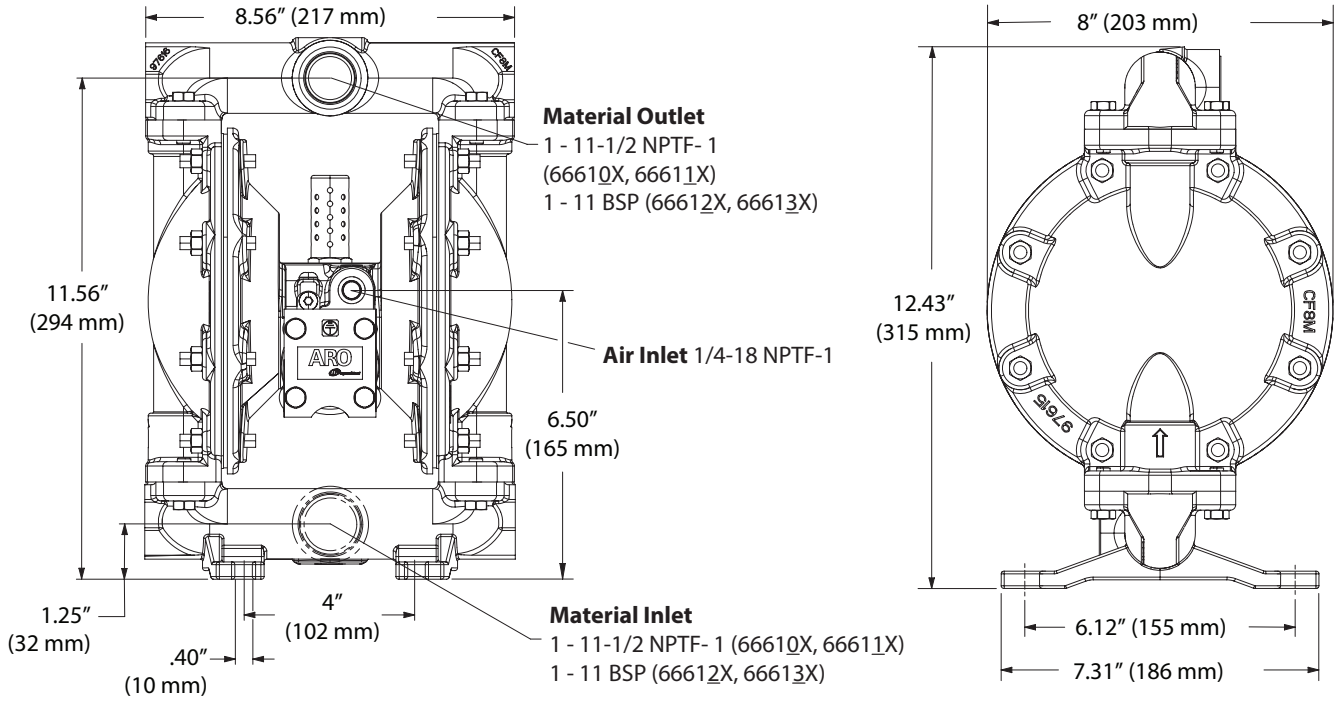

Figure 7

DIMENSIONAL DATA - 6661X9, 6661XD

Dimensions shown are for reference only, they are displayed in inches and millimeters (mm).

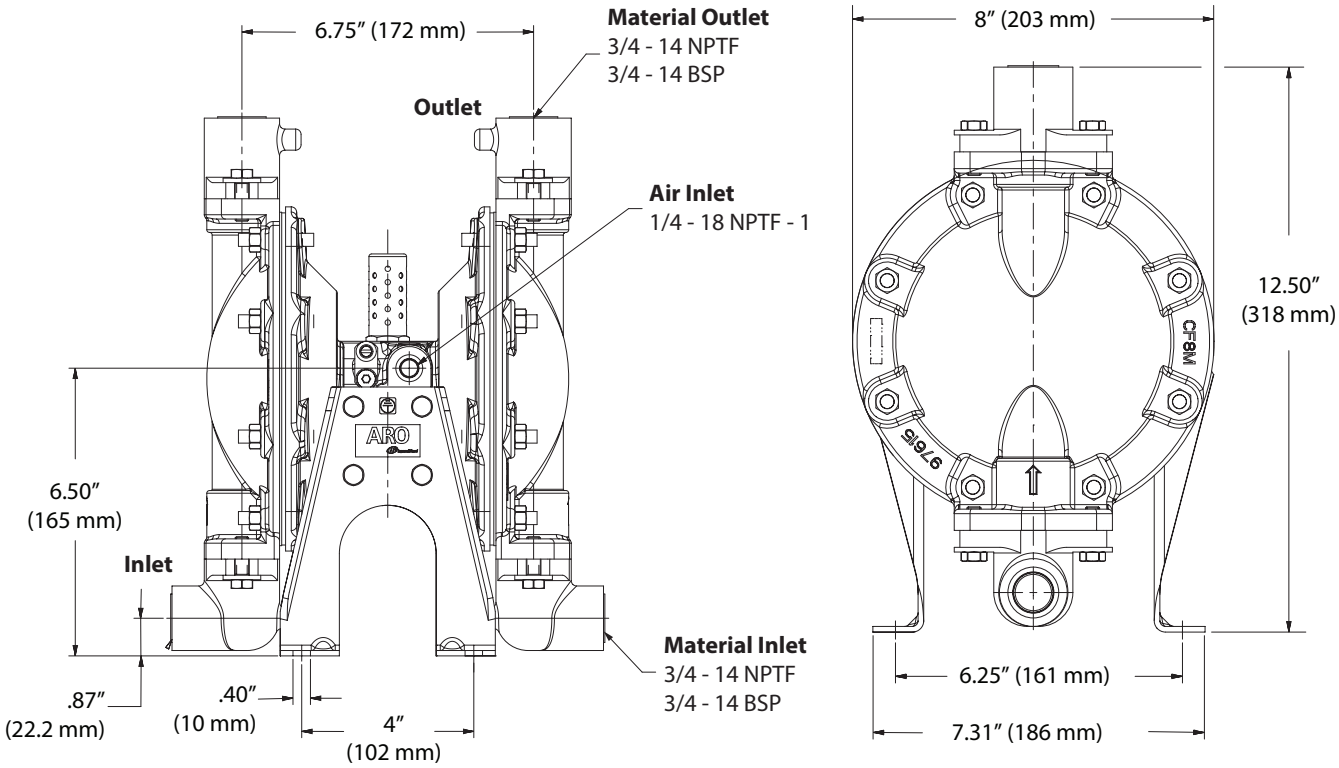

Figure 8

Dimensions shown are for reference only, they are displayed in inches and millimeters (mm).

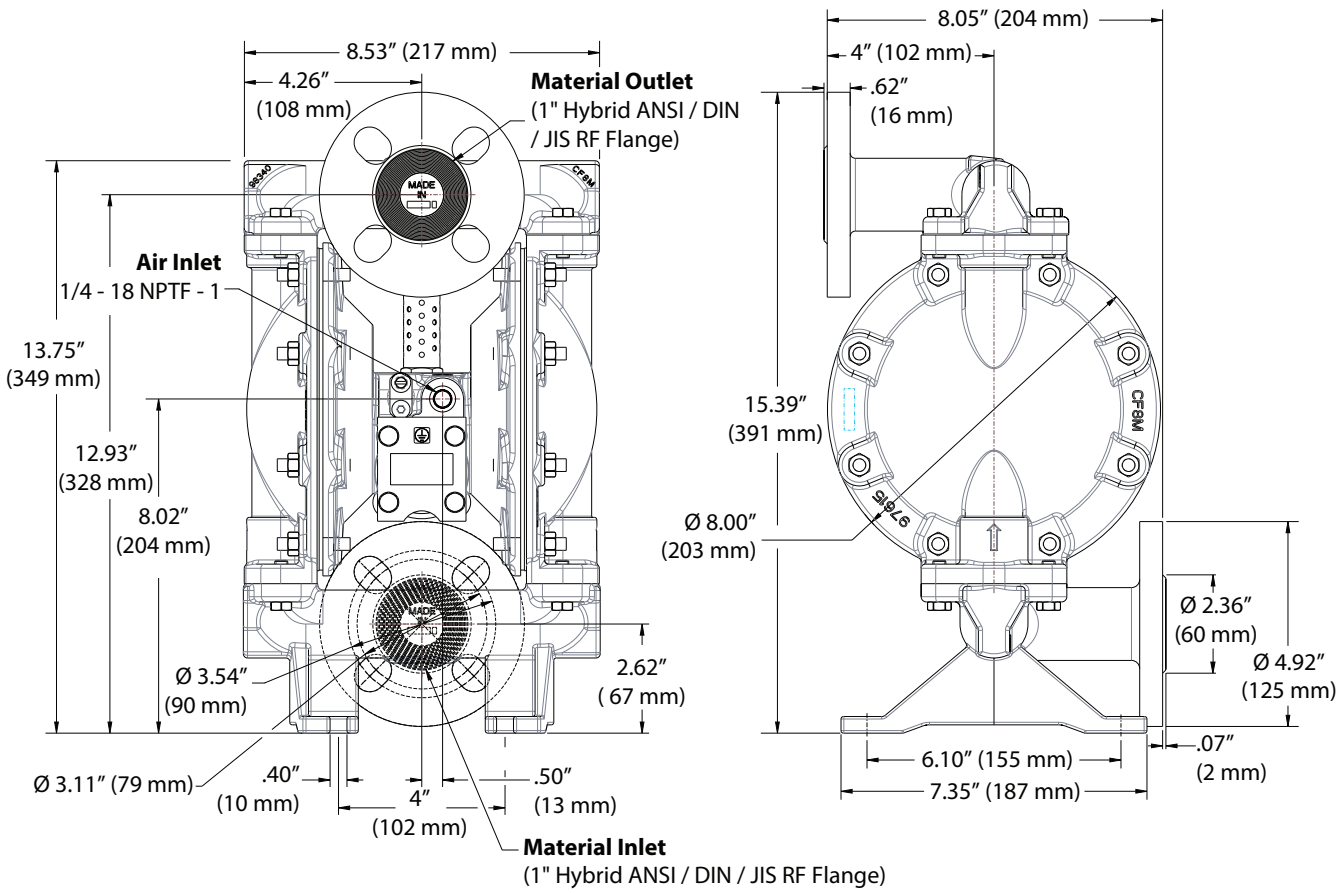

Figure 9