NOTES (UNLESS OTHERWISE SPECIFIED)
1. BREAK ALL SHARP EDGES
2. REMOVE ALL BURRS FOR SAFE HANDLING

REVISIONS

ECR	REVISION	DESCRIPTION	CHANGED BY	DATE	APPROVED BY
ENG	1	NEW RELEASE	CB	4/20/2020	RT

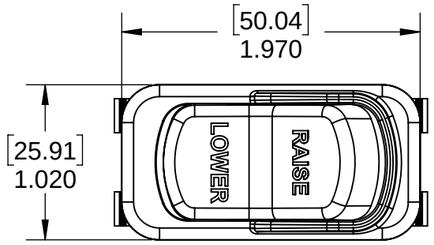

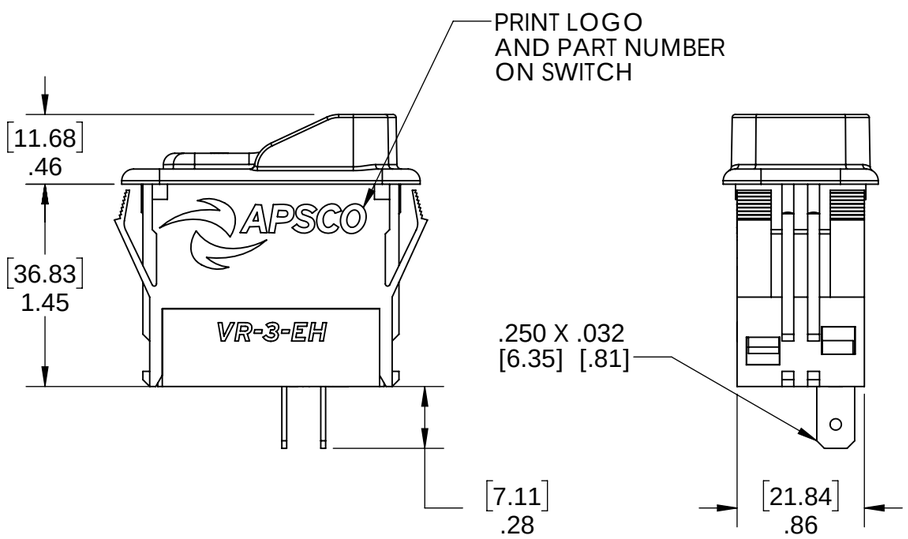

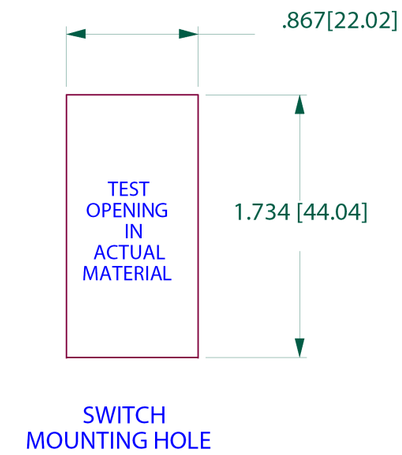

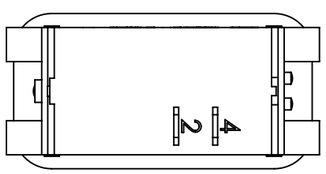

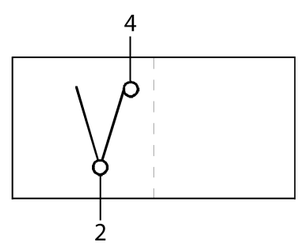

CIRCUIT DIAGRAM

PROPRIETARY AND CONFIDENTIAL
THE INFORMATION CONTAINED IN THIS DRAWING IS THE SOLE PROPERTY OF **APSCO Inc.**. ANY REPRODUCTION IN PART OR AS A WHOLE WITHOUT WRITTEN PERMISSION OF **APSCO Inc.** IS PROHIBITED.

TYPE OF PROJECTION
THIRD ANGLE PROJECTION

MATERIAL: N/A

FINISH: N/A

DRAWN	CB	DATE 4/20/2020
CHECKED	DB	DATE 4/20/2020
APPROVED	KT	DATE 4/20/2020
FINAL	RT	DATE 4/20/2020

APSCO
8178 EAST 44TH STREET
TULSA, OK 74145
(918) 622-5600

TITLE: SWITCH ELECTRIC HIGHLIFT

UNLESS OTHERWISE SPECIFIED
DIMENSIONS ARE IN INCHES
TOLERANCES ARE:
DECIMALS
.X = ±.06
.XX = ±.03
.XXX = ±.010
SURFACE FINISH: 63
ANGLES ± 2°
HOLES ± .005
HOLES LOCATION ± .005
DO NOT SCALE DRAWING

DWG. NO. VR-3-EH

SHEET SIZE	SCALE	REVISION
B	1:1	1

F/N: VR-3-EH

SHT. 1 OF 1