An Ingersoll Rand Business

BALL VALVES FOR H2 AND OTHER GASES

ENGINEERED FOR EXTREME PRESSURE

Haskel's high-pressure ball valves deliver unmatched reliability, safety and performance for demanding industrial applications. Built with advanced sealing technology and robust materials, these valves ensure zero fugitive emissions, fire-safe compliance and long-term durability – even under the harshest conditions.

Why Choose Haskel Ball Valves?

- **High pressure capability:** Up to 15,000 psi for critical applications
- **Total HermetiX™ integrity:** Certified for fugitive emissions and fire safety
- **Fully ATEX and UKEX certified:** Approved under Directive 2014/34/EU for safe operation in potentially explosive atmospheres
- **Automation-ready:** ISO 5211 mounting for easy actuation
- **Proven durability:** Tested to 16,000 cycles in accordance with ISO 19880-3
- **Hydrogen-ready:** Materials and seals fully compatible with H2 service

Haskel ball valves are widely used in hydrogen fueling systems, high-pressure gas control, industrial isolation and critical safety environments.

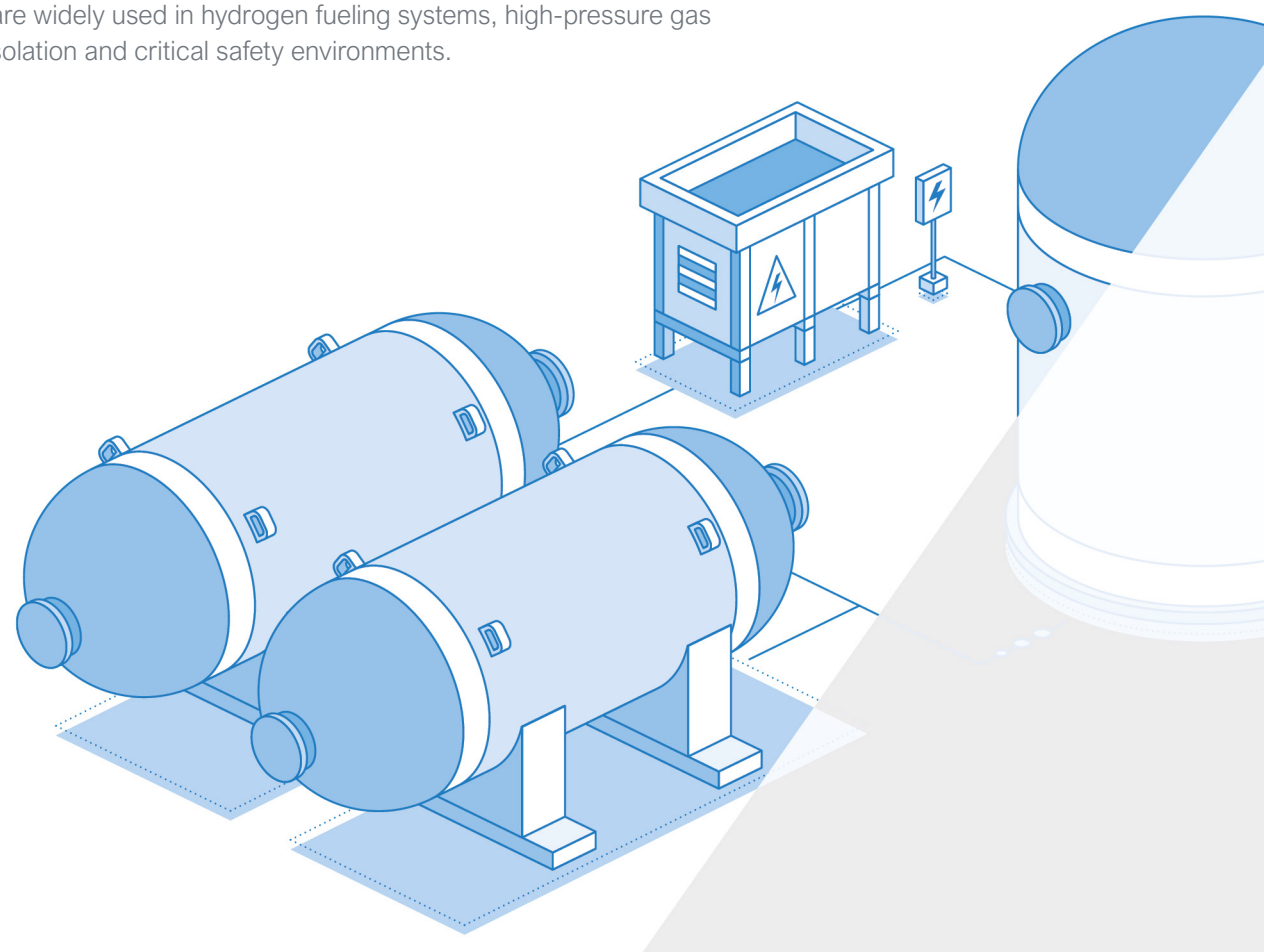

2H077 Ball Valve Series

MAWP: 7,250 PSI

Operating Conditions

- Maximum working pressure: 7,250 PSI (500 bar)
- Working temperature: -76 to +392 °F (-60 to +200 °C)
- Transportable pressure equipment directive (TPED/TPE)*: -40 to +149 °F (-40 to +65 °C)

Configurations

- 1/2” FNPT connection (optional connection sizes available upon special request)
- .44” ball port, 21.95 Cv
- Threaded, stainless steel body

*TPED range reflects the certified operating limits for transportable pressure equipment under the European transport regulations.

PNEUMATIC VALVE DIMENSIONS

Catalog no. **2H077-H-H2-22-22-C25SR2C**

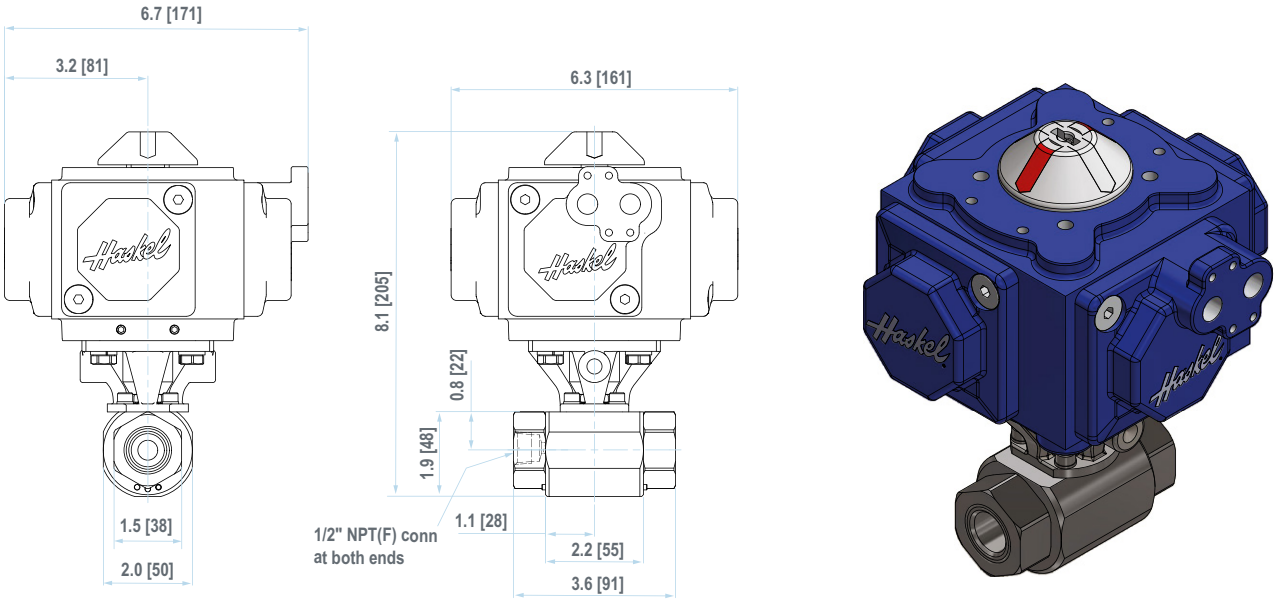

HAND-OPERATED VALVE DIMENSIONS

Catalog no. 2H077-H-H2-22-22; ISO 5211 interface; Integrated handle locking device

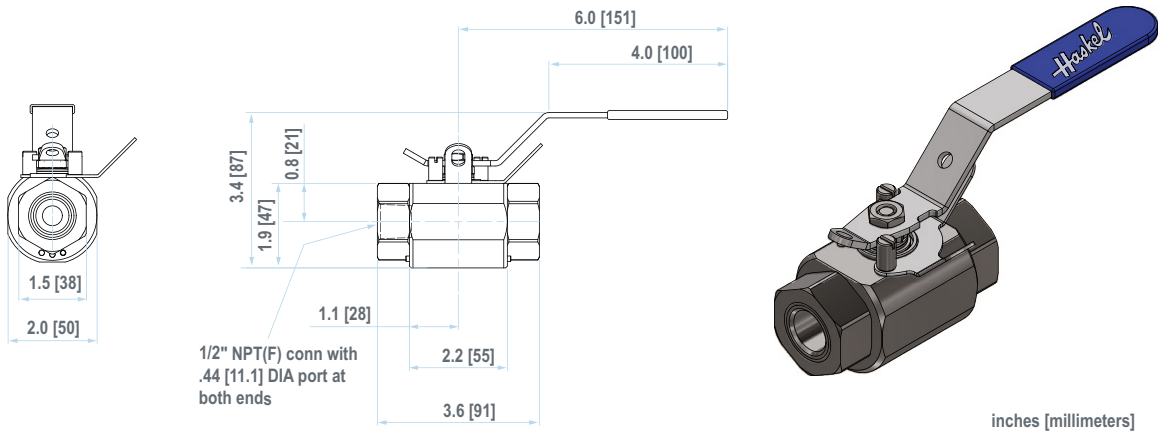

inches [millimeters]

2H157 Ball Valve Series

MAWP: 15,000 PSI

Operating Conditions

- Maximum working pressure: 15,000 PSI (1,034 bar)
- Working temperature: -40 to +185°F (-40 to +85°C)
- Transportable pressure equipment directive (TPED/TPE)*: 10,000 PSI (700 bar)

Configurations

- 9/16” M/P female connection (optional connection sizes available upon special request)
- .44” ball port, 4.39 Cv
- Threaded, stainless steel body

*TPED range reflects the certified operating limits for transportable pressure equipment under the European transport regulations.

PNEUMATIC VALVE DIMENSIONS

Catalogue no. **2H157-H-H2-18-18-C30SR2C**

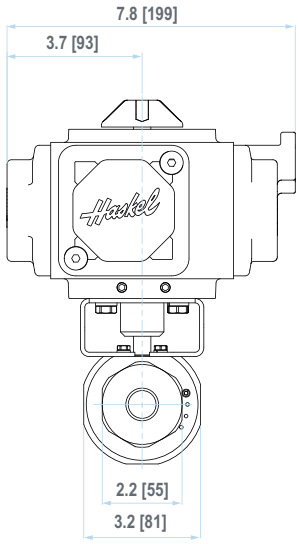

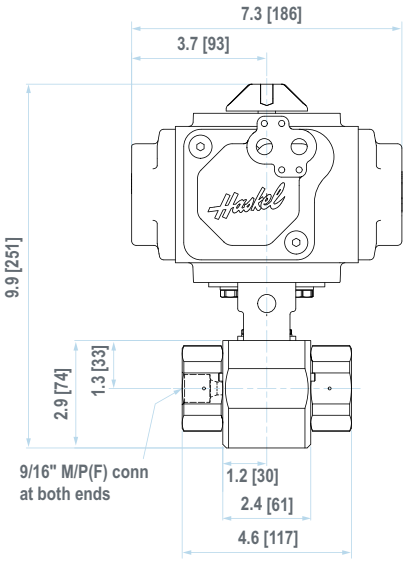

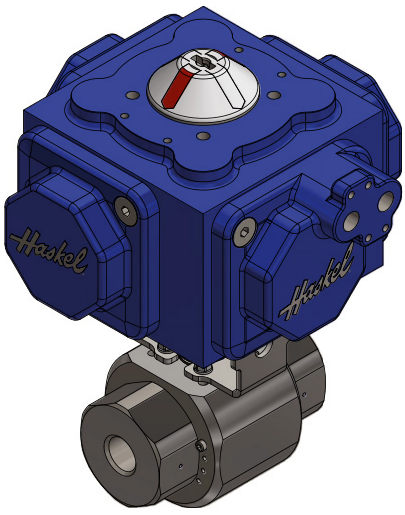

HAND-OPERATED VALVE DIMENSIONS

Catalogue no. 2H157-H-H2-18-18; ISO 5211 interface; Integrated handle locking device

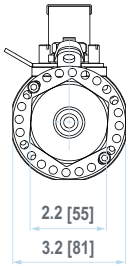

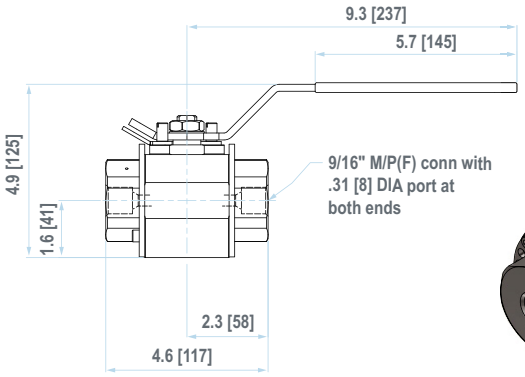

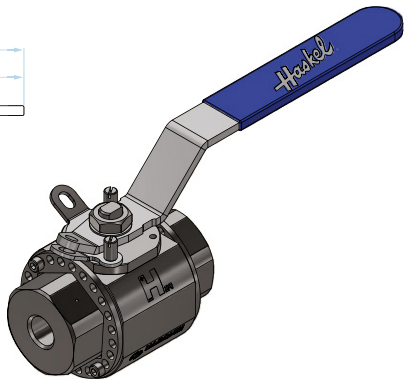

inches [millimeters]

Engineered for Confidence

When system uptime, safety and performance are critical, Haskel ball valves deliver proven reliability under the most demanding operating conditions. Designed for pressures up to 15,000 PSI, they help prevent emissions, improve safety and support long-term performance.

Benefits of our Ball Valves

- Automation-ready with standard ISO 5211 connecting plate
- Total HermetiX integrity package
  - ISO 15848-1 and API 641 emission standard certificated design
  - ISO 10497 and API 607 fire-safe standard certificated design
  - Double body sealing
- HNBR O-rings and PEEK ball seals
- All materials compatible for hydrogen use

DOUBLE STEM SEALING

HermetiX patented stem seal is used with additional O-ring sealing. The HermentiX polymeric, non-graphite stem seal design is certified for ISO 15848-1 and API 641 fugitive emission prevention standards, tested with He. An additional O-ring stem seal is added as an additional sealing point.

This design is successfully tested to 16,000 open/close cycles in accordance with ISO 19880-3 and performs well in demanding hydrogen applications.

Registered EU Design 015025978-001

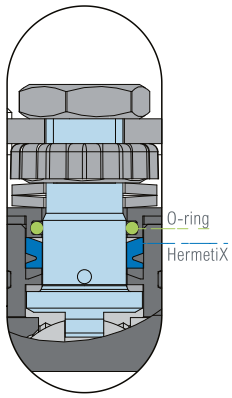

Specification tests

	2H077 SERIES	2H157 SERIES
ATEX and UKEX Certified	Approved under Directive 2014/34/EU	Approved under Directive 2014/34/EU
ISO Certifications	TPED/ TPE according to ISO 23826	TPED/TPE according to ISO 23826, ISO 19880-3: 2018 gaseous hydrogen fueling
Leak Testing	100% shell and inline leak tested	100% shell and inline leak tested



Disclaimer & Warning

It is always the system designer and end-user responsibility to verify that all equipment used is properly selected to ensure safety and integrity of their systems. Haskel offers only general information based on common market knowledge and standard market adaptation for its valves. For each system and use, the system designer and end-user must consider the particular operating conditions, media parameters and any other implications of their system for the proper selection of valves to be used.

Ready to learn more about how Haskel valves can meet your needs? Scan to connect with our team.

HASKEL.COM

SALES@HASKEL.COM

Haskel®
An Ingersoll Rand Business