Product Manual

TRICONTINENT
An Ingersoll Rand Business

Air-Z Premier Air Displacement Pipette Pump

Publication 8694-26 F

TRICONTINENT
An Ingersoll Rand Business

Copyright© 2017-2026, Tricontinent Scientific, Inc. All rights reserved.

NOTICE

The information presented in this material is based on technical data and test results of nominal units. It is believed to be accurate and reliable and is offered as an aid to help in the use of Tricontinent products. It is the responsibility of the user to determine the suitability of the product for the intended use and the user assumes all risk and liability in connection therewith. Tricontinent does not warrant, guarantee or assume any obligation or liability in connection with this information.

Publication 8694-26 F

Contents

1 About this manual

Introduction 7
Audience 7
Products covered by this manual 7
Parts of this manual 7

2 Safety and standards

About this chapter 9
Safety notifications 9
ESD precaution 9
Proper use of equipment 10
Syringe shipping precaution (non Air-Z only) 10
Regulatory notices 10

3 Product overview

About this chapter 11
General description 11
Features and facilities 12
Key specifications 14

4 Installation instructions

About this chapter 15
Unpacking 15
Before starting 16
- Basic requirements 16
- Protocol and interface options 17
- Download and install driver for USB/RS485 if needed 18
- Power and electrical considerations 19

Mount pump 20
- General mounting principles 20
- Mounting holes and dimensions 21
- Using optional cover 25

Configure DIP switches 26
Make electrical connections 27
- Pin assignments and mating connector information . . 28
- Cabling diagrams 29

Confirm communication with pump 34
Confirm with TCS Pump Commander. 34
Confirm with terminal emulation program 36
Initialize pump 36
Initialize with TCS Pump Commander 37
Initialize with terminal emulation program 37
Check LED indicators 38
Insertion requirements for disposable tips 39

5 Operating instructions

About this chapter 41
Operation overview 42
Interface options review 42
Operating tips 43
General operating tips 43
Example pipetting sequence for Air-Z Premier 44
Using an Air-Z Pump for the first time 45
Command guidelines 47
Command structure 47
Addressing 47
Command syntax 48
Command execution guidelines. 49
Execution controls 49
Initializing pump 50
Initialization sequence 50
Initialization commands. 51
Plunger movements 52
Increments and resolution. 52
Fluidic resolution. 56
Plunger move commands 57
Configuring plunger movement. 60
Configuring auxiliary connections 66
Execution control commands. 68
Disposable tip commands 70
Liquid level detection. 71
Overview. 71
Liquid level detect commands 72
Pressure data streaming 78
Pressure data format 79
Pressure data streaming commands. 81
Operation validation (aspirate/dispense verify). 83
The operation validation command (q) 83
Qualify next motion, time intersect method (q<n1>,<n2>) 84
Qualify next motion, pressure integration method (q<n>) 87

Temperature compensation 92
Using EEPROM. 94
Store and execute command strings 94
Store and retrieve user data to/from EEPROM 96
Set system parameters 97
Reset pump parameters to default (!22) 103
Reset pump (!0) 103
Standalone operation (AutoRun) 104
Report (query) commands 105
Status and error codes. 110
Command summaries. 113
RS232/RS485 command summary 113
CAN Bus command summary. 121

6 Maintenance

About this chapter 123
Routine maintenance 123
Cleaning method recommendations. 124

7 Troubleshooting

About this chapter 125
Symptoms and solutions 126
Error codes and corrective action. 129

8 Customer support

About this chapter 131
Contacting Customer Service. 131
Ordering parts and accessories 132
Warranty and return information. 132
.Obtaining technical support 132

9 Reference information

About this chapter 133
Pump addressing scheme 134
OEM and DT timing and polling guidelines 135
Master/slave relationship 135
Signal timing 135
Polling alternatives 136
OEM communication protocol 137
OEM protocol command block characters 138
OEM protocol answer block characters 141

Data Terminal (DT) protocol 142
DT protocol command block characters 142
DT protocol answer block characters. 143
CAN interface communications 144
CAN messages. 145
TCS Pump Commander overview 158
Features 158
Task windows 159
Evaluation cables and accessories 166
General-purpose evaluation cable. 167
RS232 evaluation. 168
USB/RS485 evaluation 169
CAN bus evaluation (Air-Z Flex with full electronics) 170
CAN bus data streaming example with serial control. 171

10 Revision history

Revision history table. 173

1 About this manual

Introduction

This comprehensive manual provides the instructions you need to get the Air-Z Premier Air Displacement Pipette Pump installed and operating as desired, as well as to keep it properly maintained. Contact information is also included in case you need to reach Tricontinent for assistance. See "Customer support" (page 131).

Audience

This manual is provided primarily for customers who purchase products from Tricontinent. It is expected that the majority of customers are instrument designers and software engineers who are familiar with this type of product and existing software/firmware of similar design. However, this manual is also designed to accommodate those who don't have such familiarity or who simply wish to learn more about the product.

Products covered by this manual

This manual covers the Air-Z Premier Air Displacement Pipette Pump,

Operating instructions are updated to support firmware improvements. See "Revision history" (page 173). Firmware versions may be queried with the [&] command (sent without brackets).

Parts of this manual

The following parts are included in this manual:

- About this manual (this chapter)
- Safety and standards, page 9
- Product overview, page 11
- Installation instructions, page 15
- Operating instructions, page 41
- Maintenance, page 123
- Troubleshooting, page 125
- Customer support, page 131
- Reference information, page 133
- Revision history, page 173

This page intentionally blank

2 Safety and standards

About this chapter

This chapter contains safety notifications that may appear in this manual, cautions about proper use of the equipment, and information about regulatory standards that may affect the Air-Z Premier Air Displacement Pipette Pump.

The Air-Z Premier is designed to meet recognized technical regulations and is built with state-of-the-art components. Nevertheless, risks to users, property, and/or the environment can result when it is used carelessly or improperly. Appropriate warnings are included to notify of possible hazards.

Safety notifications

⚠CAUTION

CAUTION: Alerts you to the possibility of equipment damage and/or improper function if these instructions are not followed.

⚠WARNING

WARNING! Indicates a hazardous situation which, if not avoided, could result in injury and/or property damage.

⚠DANGER

DANGER! Indicates a hazardous situation which, if not avoided, can result in death or serious injury and property damage. This alert is reserved for the most extreme situations.

ESD precaution

⚠CAUTION

CAUTION: ESD-sensitive equipment!

Always use proper ESD practices when handling the Air-Z Premier Air Displacement Pipette Pump. Because it is an electronic device, the pump is vulnerable to ESD (electrostatic discharge). Electrostatic discharge can come from common objects, fixtures, and flooring materials such as carpets, causing the pump to fail prematurely. Proper ESD practices include the use of static-free work areas, wrist or ankle grounding straps, ESD mats, non-static flooring material or treatment, and similar provisions.

Proper use of equipment

The Air-Z Premier is designed for pipetting and dispensing operation. Any other use may damage the pump and/or produce unreliable results.

Note: It is the purchaser's responsibility to determine the suitability of an application and material compatibility of the product. For pumps with removable syringes, a chemical compatibility chart is in the Reference information chapter.

Syringe shipping precaution (non Air-Z only)

⚠CAUTION

CAUTION: For products with removable syringes. Avoid shipping pumps to Tricontinent with syringes installed. During transport, shock and vibration can be transmitted directly to the syringe. This can lead to glass breakage, loosening of syringes from their threaded ports, and potentially other problems. Syringes should always be shipped separately inside their original packaging for the highest level of protection from damage. Using the pumps' original packaging is insufficient.

For example, when shipping pumps to Tricontinent that have been installed in an instrument, syringes should be removed and shipped in their individual packaging.

Regulatory notices

FDA

The Air-Z Premier Air Displacement Pipette Pump is a general laboratory component. Because it is not a medical device, it is not subject to FDA approval.

CE

The Air-Z Premier Air Displacement Pipette Pump is a modular device intended for incorporation into larger systems, which themselves require independent certification. Therefore, the Air-Z Premier Air Displacement Pipette Pump does not have its own CE mark.

RoHS

The Air-Z Premier Air Displacement Pipette Pump is RoHS compliant. It is constructed of components that meet the requirements set by the European Union's Restriction of Hazardous Substances Directive.

EMI

The Air-Z Premier Air Displacement Pipette Pump can be affected by excessive electromagnetic interference.

EMC

The Air-Z Premier Air Displacement Pipette Pump has been designed to CISPR 11 class B standards. Depending on the system configuration, the user may need to take steps to mitigate radio interference.

3 Product overview

About this chapter

This chapter provides a general introduction to the Air-Z Premier Air Displacement Pipette Pump. The following parts are included:

- About this chapter, page 11
- General description, page 11
- Features and facilities, page 12
- Key specifications, page 14

General description

Figure 3-1. Typical Air-Z Premier Air Displacement Pipette Pump

The Air-Z Premier Air Displacement Pipette Pump is a full-featured, fully programmable air displacement pipette module designed for automated instrumentation. Utilizing disposable tips, cross contamination and carryover during sample transfer and reagent aliquoting are avoided; and the tubing and priming normally required for liquid handling are eliminated.

The Air-Z Premier includes automatic detection of liquid levels and tip blockages, with built-in tip ejection. Also included are built-in pressure sensing, pressure data streaming, and aspirate/dispense validation.

The module is a self-contained unit that includes the pump, stepper motor/drive mechanism, and control electronics.

This pump is an excellent choice for new installations, and for replacements where experienced IVD (in vitro diagnostic) instrument manufacturers would like to maximize investments they have already made in instrumentation. The Air-Z Premier utilizes standard communication interfaces and methods for mounting used by other pipette pump designs.

Multi-pump communication is provided for via an RS485 or CAN bus. The built-in RS232 interface automatically converts to RS485, allowing a single

RS232 port to control multiple pumps. Direct RS485 and CAN is also supported in this mode. Alternative modes allow the RS485, RS232, or CAN ports to stream pressure data. In addition, it is possible to configure the pump for standalone operation. Converters are available for interfacing to USB ports on PCs or controller devices.

Features and facilities

Facilities are shown in Figure 3-2 (page 13).

Features include:

- 1000 µL pump capacity (or 500 µL, available as OEM-only option)
- Removable tips available in 50 µL, 200 µL, and 1000 µL sizes. Other sizes available by request.
- Single axis, microstepping motion control
- Quadrature encoder for lost step detection
- On-board LEDs for confirming operation and notifying of error conditions
- On-board homing opto sensor
- Built-in tip ejector
- Tip on/off sensor, automatic tip loss detection
- On-board temperature sensor
- Configurable auxiliary input and output
- Single fused +24V input
- Liquid level detection using pressure (pLLD), capacitance (cLLD), or a Hybrid mode (hLLD) that uses both capacitance and pressure
- Real-time pressure data streaming that can be used by the host PC to verify fluid operations
- RS232, RS485, and CAN bus communication interfaces; programmable communication rates
- Built-in RS232 to RS485 translator, allowing for daisy-chaining pumps from a single RS232 serial port
- Individually addressable, allowing for daisy-chaining of up to 16 pumps
- Configurable for standalone operation

Figure 3-2. Facilities on Air-Z Premier pump

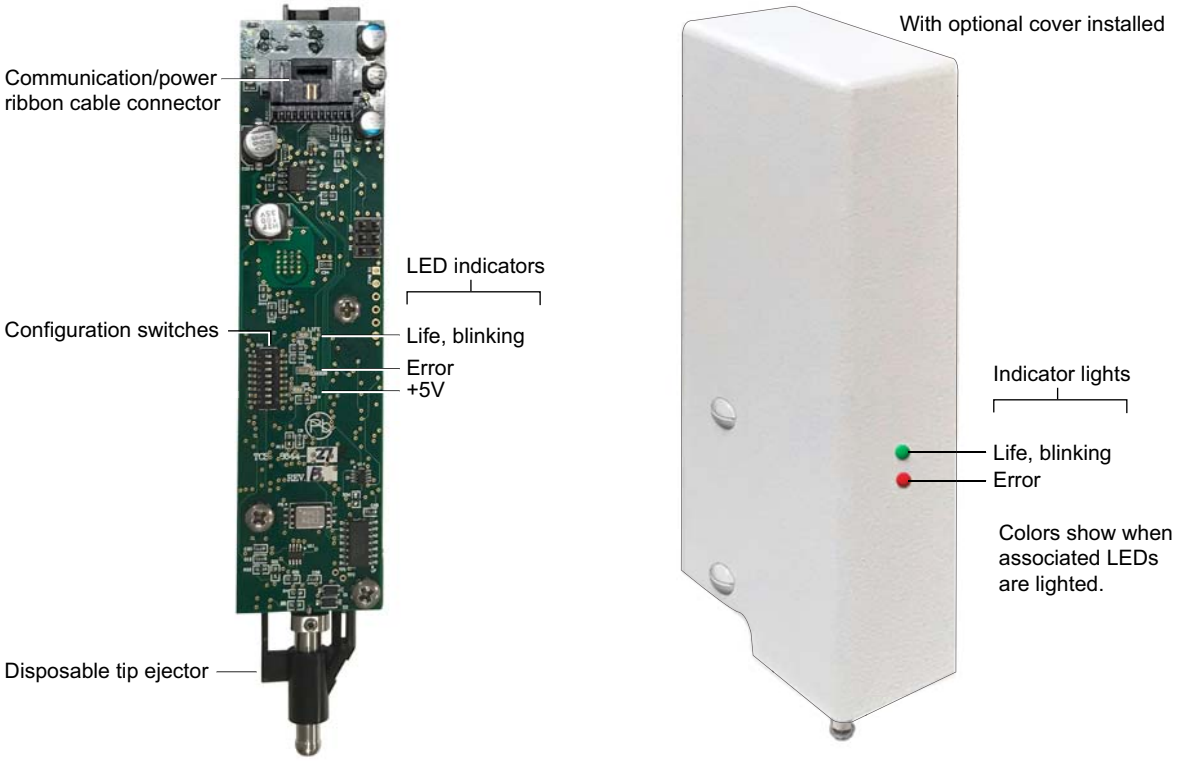

Key specifications

- Interface: RS232, RS485, CAN
- Communication rates: RS232/RS485: 9600 or 38400 baud; CAN: 100K, 125K, 250K, 500K, 1M
- Format (RS232/RS485): Data bits 8, Parity None, Stop Bit 1, half duplex (RS232 is full duplex)
- Operating temperature 15°C to 40°C (59°F to 104°F)
- Humidity 20% to 95% RH at 40°C (104°F)

More detailed specifications can be seen at www.tricontinent.com. Product data sheets can be downloaded from this location.

4 Installation instructions

About this chapter

This chapter describes how to install your Air-Z Premier Air Displacement Pipette Pump.

The following parts are included:

- About this chapter, page 15
- Unpacking, page 15
- Before starting, page 16
- Mount pump, page 20
- Configure DIP switches, page 26
- Make electrical connections, page 27
- Confirm communication with pump, page 34
- Initialize pump, page 36
- Check LED indicators, page 38
- Insertion requirements for disposable tips, page 39

Unpacking

⚠CAUTION

CAUTION: Always use proper ESD practices when handling the Air-Z Premier Air Displacement Pipette Pump, including the tip adapter.

1. Remove items from shipping carton.
2. Check the contents against the packing slip to make sure that all the components are present. If any components are missing or damaged, see instructions in "Customer support" (page 131).
3. Dispose of packing material in accordance with local environmental regulations.

Before starting

Basic requirements

Basic requirements for installing your Air-Z Premier Air Displacement Pipette Pump are listed below. If you have difficulty obtaining any items, you can get assistance from Customer Service. See "Customer support" (page 131).

- **Desired disposable tips** that are compatible with the Air-Z Premier Air Displacement Pipette Pump. The following types are available:
  - Filtered
  - Clear tip with no filter media (default configuration)

  You may obtain a list of recommended and compatible tips from Customer Service, as well as assistance with selecting the appropriate type of tip for your application.

  Note: Only Axygen® style tips are recommended.
- **Cabling as needed.** For initial evaluation purposes, you may refer to "Evaluation cables and accessories" (page 166).
- **Computer,** Windows® based, to serve as the host controller
- **Optional USB driver for USB/RS485.** If you are going to use a USB/RS485 interface to connect your host PC to the Air-Z Premier, you will need a USB driver, which can be downloaded as described in "Download and install driver for USB/RS485 if needed" (page 18). A Tricontinent USB-to-RS485 converter (0960) is available through Customer Service.
- **Optional USB driver for CAN.** For CAN communication through USB, a Tricontinent USB/CAN converter (0963) is available. The USB/CAN converter comes with its own driver and instructions.
- **Software interface** for communicating with the pump or pumps.
  - For the best evaluation and development experience, use TCS Pump Commander. TCS Pump Commander is user-friendly and easy to set up and get going quickly, and contains tools to aid instrument development. It does not require the user to write any protocol software, and is compatible with serial and CAN protocols. Version 2.1.0 and higher is required for the instructions in this manual.
  - Alternatively, terminal emulator programs such as PuTTY or RealTerm may be used to send commands in DT protocol if communicating through RS232/RS485.
  - For instrument development, only an appropriate communication port on the host PC is needed.

  Details concerning protocol and communication options are included on page 17.

Protocol and interface options

Communication standards

The Air-Z Premier Air Displacement Pipette Pump uses the following communication standards/interfaces:

- RS232
- RS485
- CAN (Controller Area Network) bus.

Note: RS232/RS485 format: Data bits 8, Parity None, Stop Bit 1, half duplex if RS485, full duplex if RS232. Baud rate 9600 or 38400, configurable.

Protocol

Three communication protocols are available:

- OEM communications protocol
- Data Terminal (DT) protocol
- CAN (Controller Area Network) protocol

These protocols are described in detail in Chapter 9, Reference information, which begins on page 133. The Air-Z Premier firmware automatically detects OEM or DT protocol for RS232/485 applications.

Table 4-1: Protocol and interface summary[1]

Hardware/electrical interface	Communication protocols/ standards	Comments	Connection
RS232	DT or OEM protocol	DT is recommended for use with terminal emulator programs. DT is automatically selected when TCS Pump Commander is used with RS232 or RS485. OEM is recommended for instrument development because of its robust error checking and correction.	Serial computer port connects through flex cable to input on one pump; RS485 bus connects to remaining pumps (daisy-chain).
RS485/USB	DT or OEM protocol		USB port connects through converter; RS485 is used for daisy-chaining to remaining pumps on bus. Direct RS485 connection is also accepted.
CAN	CAN hardware/electrical interface and communication protocol.	CAN permits multi-pump pressure data streaming. If assistance is needed, contact Customer Service (see "Customer support" (page 131).	USB port typically connects through optional converter to CAN input on one pump. CAN bus connects to remaining pumps on bus. Direct CAN connection is also accepted.

1. For evaluation cables and hookup, refer to "Evaluation cables and accessories" (page 166).

⚠CAUTION

CAUTION: Please note that the pump communication buses (RS232/RS485/CAN) use liquid handling industry-developed custom communication protocols (OEM, DT, and CAN). It is possible (but not recommended) for non-pump devices using a different communication protocol to exist on the same RS485 or CAN bus, as long as the non-pump device's protocol does not interfere with the pump bus protocol.

Tricontinent Scientific, Inc. does not encourage or warrant any use of the pump buses with non-pump devices, regardless of information provided by Tricontinent Scientific, Inc. Results may be unsatisfactory.

Download and install driver for USB/RS485 if needed

The USB driver is required only when a Tricontinent USB converter is being used to communicate with the Air-Z Premier through the RS485 interface.

(This driver is not for the CAN bus interface, which uses a different USB driver supplied with the CAN/USB converter.)

If using other third-party USB converters, follow their instructions for downloading and installing drivers.

Note: When using TCS Pump Commander, you will need to know which COM port will be used for communicating with the Air-Z Premier.

1. Go to this link to download the USB driver for your system:

   https://www.silabs.com/developers/usb-to-uart-bridge-vcp-drivers

   This takes you to a web page of Silicon Labs, where the USB drivers for various operating systems are available.

   Note: It is possible for the links referred to in this procedure to change. If this occurs, contact Customer Service for assistance or search elsewhere on the Silicon Labs website for the USB drivers.

2. Click on “Downloads.”
3. Select whichever link is appropriate for your operating system. At the date of this writing, the following applicability information was provided. However, please read the accompanying release notes yourself to confirm:
   - CP210x Universal Windows Driver is for Windows 10 version 1803 and later (x64, x86) and Windows 11 (x64). *Follow instructions in the extracted Release Notes to install.*
   - CP210x_Windows_Drivers.zip is for Windows 8.1 (x86 32/64 bit), Windows 8 (x86 32/64), Windows 7 (x86 32/64). *Follow instructions in the extracted Release Notes to install.*
   - CP210x_VCP_Windows is for Windows 8/8.1 (64/32), 7 (64/32), Vista (64/32), and XP. *Follow instructions in the extracted Release Notes to install*.
   - Drivers for legacy Windows operating systems may be available on the site. Otherwise, contact Customer Service for assistance.

   Note: Do not download files named “. . .Drivers with Serial Enumerator.”
4. Connect a USB port on the computer with the USB port on the USB/RS485 converter. Windows® should recognize it and load the correct driver. Once this is done, the USB connection is ready to use.

Power and electrical considerations

The Air-Z Premier has the following power requirements:

- Input voltage: 24VDC ± 10%
- Input current; 500mA peak current max., 200 mA average (RMS) current max., 70 mA typi cal idle current

It is suggested that an appropriately designed commercial power supply be used.

Power supply requirem ent for single pump

The power supply for a single Air-Z Pr emier pump should meet the following requirements:

- Output voltage: 24V nominal ±10% with good regulation
- Conformance to required safe ty and EMI/RFI specifications
- If switching supply is used, minimu m load specification less than pump idle current (above)

Power supply sizing for multiple pumps

When operating more than one Air-Z Premier pump, the power supply should be sized to provide the total peak current for all devices. If pumps are not operating simultaneously, a power supply with a reduced rating may be used. The minimum power supply rating should be confirmed by measurement.

Up to eight Air-Z Premier units may be powered from one 24V 4A source, provided that the wire size and the power supply are adequate for the total current and voltage drop.

Cabling

To reduce voltage drops and increase noise immunity, it is good practice to use one power cable for every two pumps. Power lines to the pump should be 24 AWG or heavier, and as short as practical, based on the total current through the wires.

⚠

CAUTION: Mechanical switches should not be located in line with the DC input of the pumps to apply and remove power. This can result in damage to the equipment from voltage spikes.

For available evaluation cabling, please refer to "Evaluation cables and accessories" (page 166).

Note: There are limitations on daisy-chaining signals. For more information, see "Make electrical connections" (page 27).

Tip adapter location

Figure 4-2. Tip adapter location information

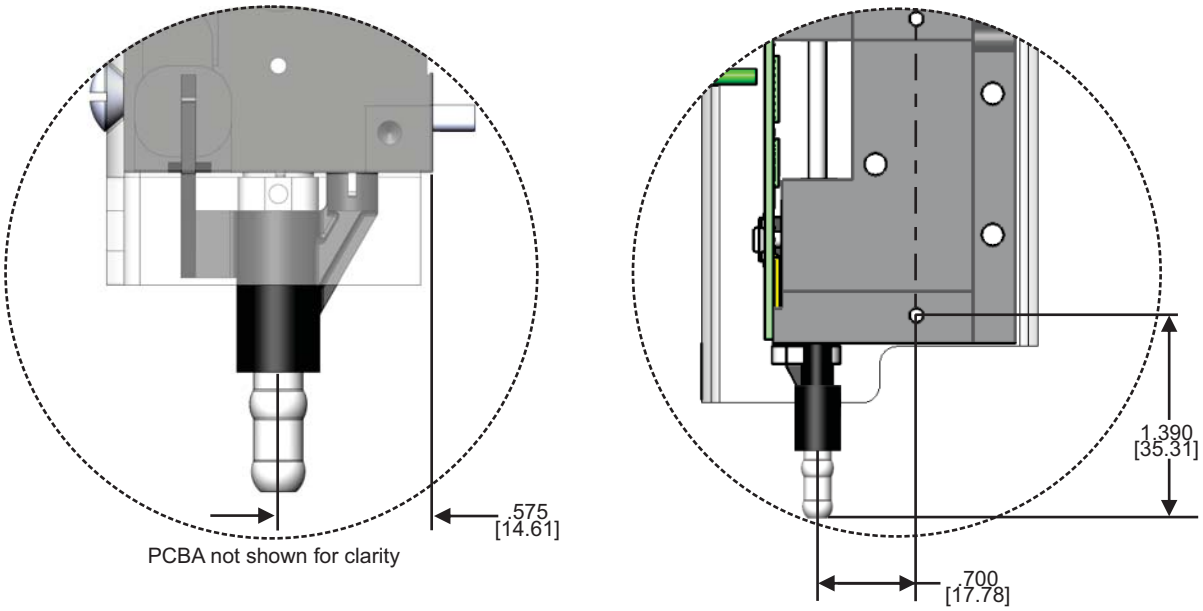

Note: Dimensions in inches [mm] unless otherwise specified

Mounting hole layout on pump

Figure 4-3. Mounting hole layout

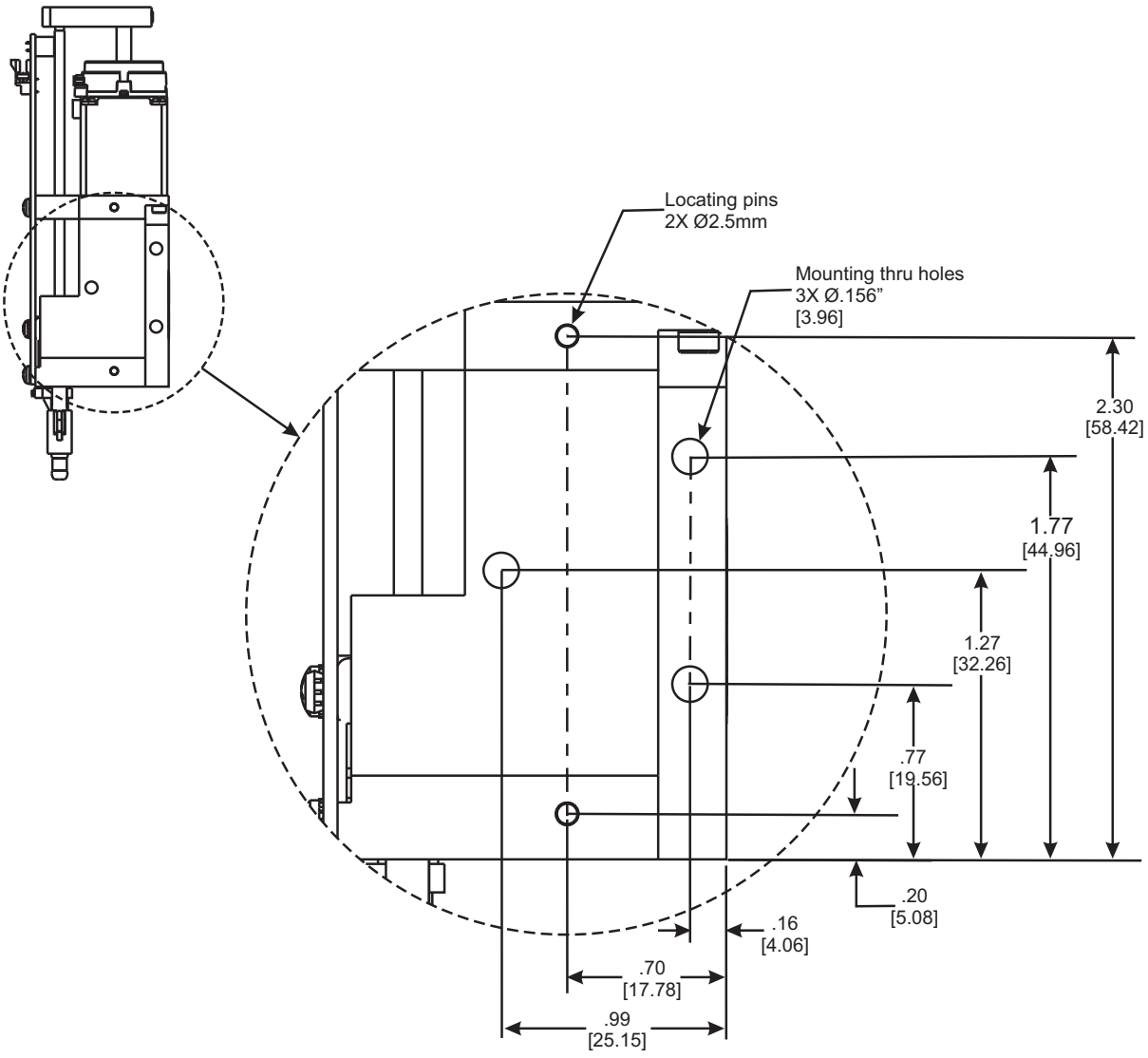

Note: Dimensions in inches [mm] unless otherwise specified

Mounting plate guidance

Figure 4-4 shows hole placement, size, and fastener requirements for mounting plates intended to support the Air-Z Premier.

Figure 4-4. Mounting plate hole guidance

NOTES

- View shows example mounting plate side that faces pump body. Outer dimensions are as needed.
- Layout matches through-holes in pump body.
- Use M3.5 (or 6-32) fasteners with minimum length of 30mm (or 1-1/8 inch).
- Torque value for fasteners will be dependent on fastener and mounting plate materials used.
- Lock washers or thread locker may be used for improved fastener retention.

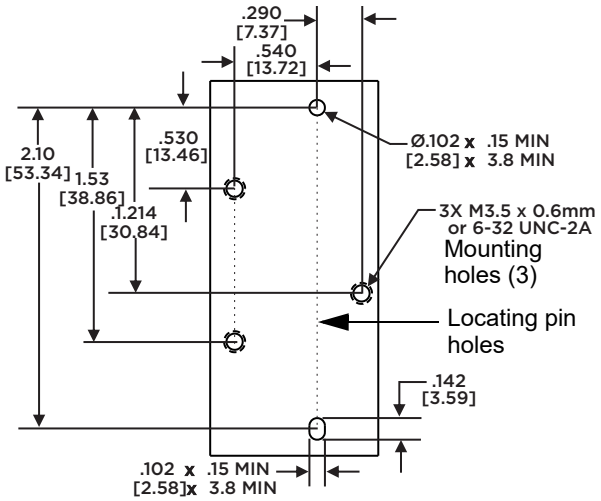

Note: Dimensions in inches [mm] unless otherwise specified

Using optional cover

An optional cover is available for the Air-Z Premier Air Displacement Pipette Pump. The cover provides a more pleasing appearance and provides some protection of the electronics from accidental bumping or touching.

The cover kit (catalog number 549) includes the cover and two screws for mounting to the Air-Z Premier.

The cover is installed after the pump is mounted, because through-holes are used for mounting. See Figure 4-5.

Figure 4-5. Installing optional cover

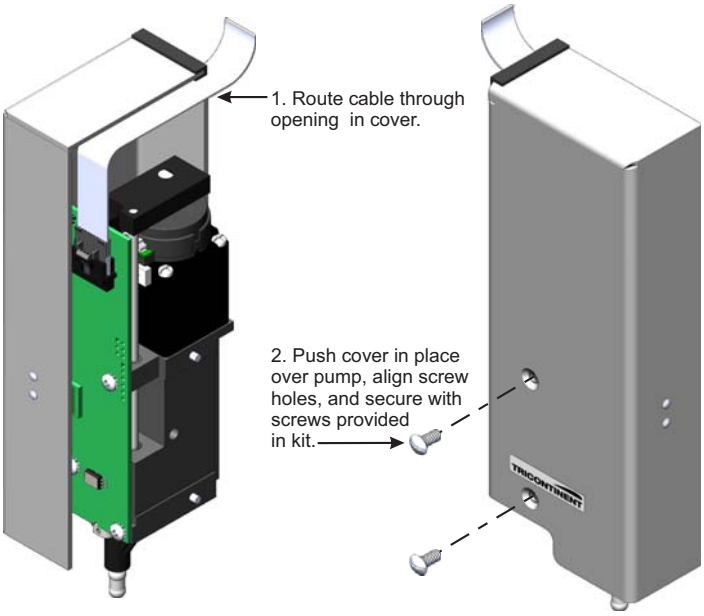

Configure DIP switches

Refer to Tables 4-2 and 4-3 below. The DIP switch settings control device addressing, termination, and communication settings. The AutoRun function, which enables standalone operation, is also enabled or disabled by one of the settings. A small pointed tool that is ESD resistant may be used to operate the switches.

Figure 4-6. DIP switch location

Table 4-2: Basic DIP switch settings

Switch	Function	Switch OFF	Switch ON
1	Address 3	Refer to Table 4-3 below.	
2	Address 2		
3	Address 1		
4	Address 0		
5	RS485 termination	Non-terminated	Terminated
6	CAN termination	Non-terminated	Terminated
7	AutoRun	standalone operation	Normal operation
8	Communication Configuration	Programmable baud rate and protocol via [U] command (see page 97). RS232 and RS485 baud rate is 38400 until modified. CAN comm rate is 500K until modified. Streaming port is set via [U].	RS232 and RS485: 9600 baud CAN: 100K Auto-detect DT or OEM protocol No streaming **Note:** Use this position for initial communication,

Table 4-3: Address settings via switches on SW1

Switch 1 Address bit 3	Switch 2 Address bit 2	Switch 3 Address bit 1	Switch 4 Address bit 0	Pump device number[1]	
				RS232/485	CAN
ON	ON	ON	ON	1	0
ON	ON	ON	OFF	2	1
ON	ON	OFF	ON	3	2
ON	ON	OFF	OFF	4	3
ON	OFF	ON	ON	5	4
ON	OFF	ON	OFF	6	5
ON	OFF	OFF	ON	7	6
ON	OFF	OFF	OFF	8	7
OFF	ON	ON	ON	9	8
OFF	ON	ON	OFF	10	9
OFF	ON	OFF	ON	11	10
OFF	ON	OFF	OFF	12	11
OFF	OFF	ON	ON	13	12
OFF	OFF	ON	OFF	14	13
OFF	OFF	OFF	ON	15	14
OFF	OFF	OFF	OFF	16	15

1. For addressing details, refer to "Pump addressing scheme" (page 134).

Make electrical connections

All electrical connections, including power, communication, and auxiliary control (digital I/O), are made through 10-pin connector P4, located on the PCBA of the pump. Part identification information for the mating connector is located on page 29.

Cables are available for connecting to P4. Contact Customer Service for assistance. Also refer to "Evaluation cables and accessories" (page 166).

⚠CAUTION

CAUTION: Do not use cable for daisy-chaining pumps that will connect all pump signals in parallel. There are several interface signals that cannot be daisy-chained without likely causing damage to the pump electronics. Failure to avoid this type of daisy-chaining may void the warranty. Contact Customer Service if more information is needed.

Pin assignments and mating connector information

Figure 4-7. Connector P4 location

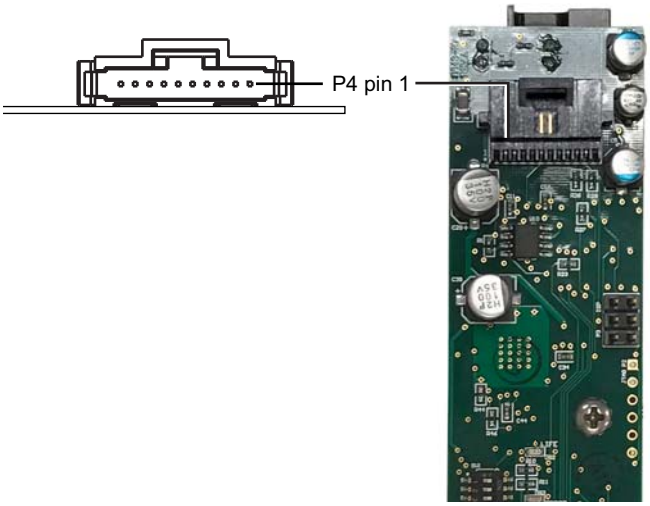

Table 4-4: Connector P4 pin assignments

Pin	Function	Details
1	24VDC	24VDC nominal, ±10%, 500 mA peak
2	Ground	
3	RS232 TXD line	Output data
4	RS232 RXD line	Input data
5	I/O 1	Programmable auxiliary output. May be used for any TTL-compatible interfacing. Max source/sink current = 5mA. Refer to "Configuring auxiliary connections" (page 66).
6	I/O 2	Programmable auxiliary input/output. When configured as an input, is general-purpose input and E brake. Can be used to trigger or condition command sequences from external signal. When configured as an output tip loss signal, use a maximum source/sink current of 5 mA. TTL level input/output (4.7K internal pullup to +5V). Refer to "Configuring auxiliary connections" (page 66). **Note:** The I/O 2 pin, when configured as an input, has a low internal pull-up resistance and a 1 ms debounce time.
7	RS485 A line	
8	RS485 B line	
9	CAN HI signal line	CAN +
10	CAN LO signal line	CAN -

⚠CAUTION

CAUTION: Take care when making connections to input and output pins, to avoid electrical damage to equipment. Power must be off. Contact Customer Service with any further questions.Take care when making connections to input and output pins, to avoid electrical damage to equipment. Power must be off. Contact Customer Service with any further questions.

Part information for P4 mating connector

To aid in locating mating connectors, the following part numbers for the on-board P4 connector are provided:

Manufacturer: TE Connectivity, part number 5-104074-1

The TE part number for mating housing is 487547-7. Connector pins and pre-assembled cable/connector assemblies may be available through the manufacturer and/or distributors.

Options for connecting to P4

Several options are available for connecting to P4:

- A flat 10-position flex cable is typically used for connecting to P4, assembled using a compatible mating connector. See "Part information for P4 mating connector" above.
- For evaluation purposes, specialized cable assemblies are available. See "Evaluation cables and accessories" (page 166).

⚠CAUTION

CAUTION: Make sure power is off while making connections to P4. Connecting or disconnecting with power applied may cause damage to the equipment.

Cabling diagrams

Cabling for the different protocols is shown on the following pages. Please note:

- The diagrams show cabling for RS232, RS485, and CAN buses. Each bus can support up to 16 devices.
- Power, communication, and auxiliary connections are shown.
- Single-pump cabling as well as multi-pump cabling is shown.
- Termination requirements are shown. Cabling for pressure data streaming is the same as for communication. Only the operation is different.

RS232 cabling

RS232 is connected directly to the first pump on the bus. The pump automatically converts this to RS485 for communication to all of the other pumps on the bus.

Figure 4-8. RS232 cabling

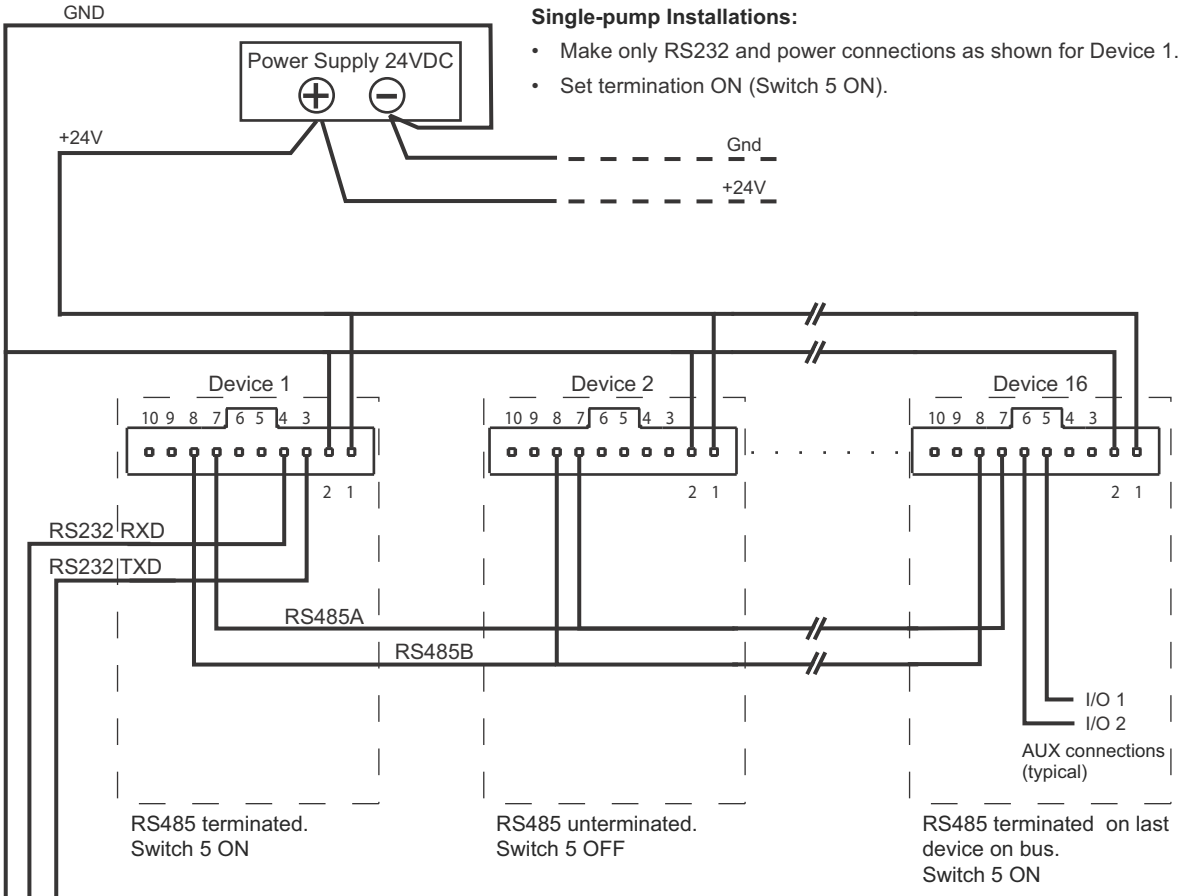

Single-pump Installations:

- Make only RS232 and power connections as shown for Device 1.
- Set termination ON (Switch 5 ON).

Host RS232 Port		Pump Port
Function	DB9 Pin	Function
RXD	2	TXD
TXD	3	RXD
GND	5	GND

Device addressing
Device addresses are assigned by DIP switch settings. See DIP switch configuration instructions in manual.

Power Cabling Recommendation
A single power supply may be used to power up to 8 devices with proper sized wiring.

⚠CAUTION
CAUTION: Do not place mechanical switches in line with DC input of pumps to apply and remove power.

Do not connect or disconnect signals with power applied; otherwise equipment can be damaged.

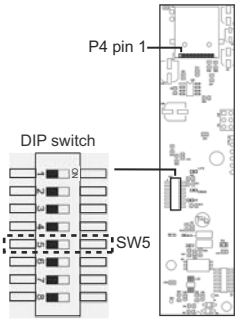

RS485 bus cabling

RS485 may be connected directly or through a USB-to-RS485 converter. Tricontinent offers an appropriate converter for this purpose (catalog number 0960). For converter hookup, see "USB/RS485 converter hookup detail" (page 32).

Figure 4-9. RS485 cabling

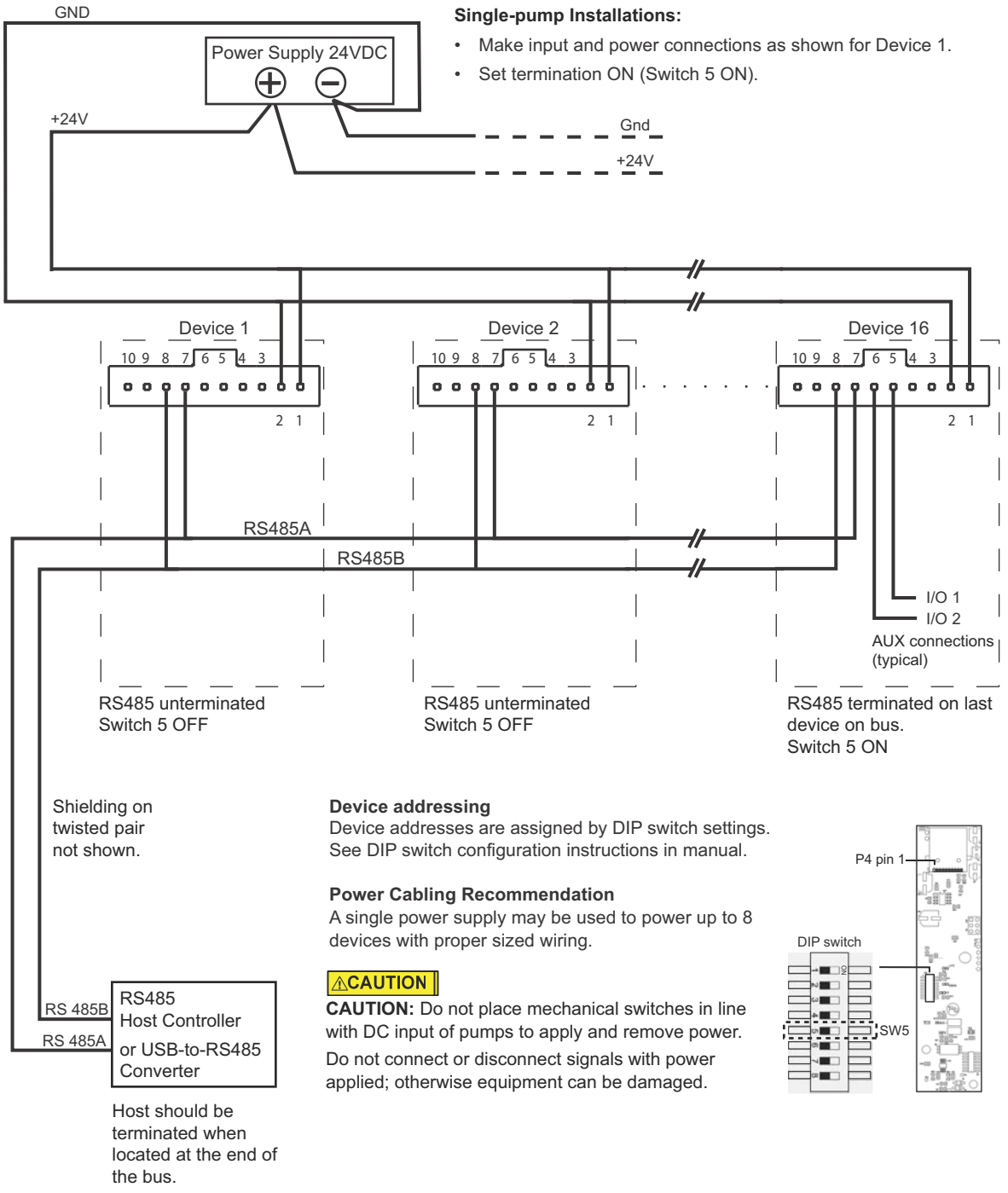

Single-pump Installations:

- Make input and power connections as shown for Device 1.
- Set termination ON (Switch 5 ON).

Device addressing
Device addresses are assigned by DIP switch settings. See DIP switch configuration instructions in manual.

Power Cabling Recommendation
A single power supply may be used to power up to 8 devices with proper sized wiring.

⚠CAUTION
CAUTION: Do not place mechanical switches in line with DC input of pumps to apply and remove power.
Do not connect or disconnect signals with power applied; otherwise equipment can be damaged.

USB/RS485 converter hookup detail

The Tricontinent USB/RS485 converter (0960) is used when it is desired to connect to RS485 from a USB port on the host controller. The converter has a 4-conductor cable assembly and IDC-style plug attached. These may be discarded and replaced as needed.

Figure 4-10. USB/RS485 converter wiring detail

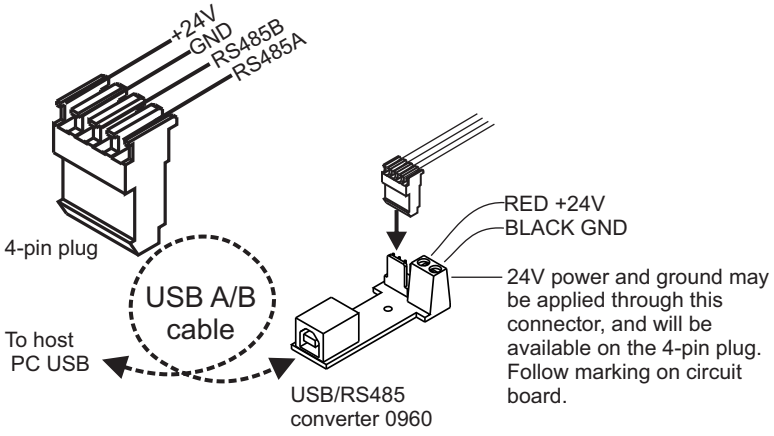

CAN bus cabling

The host PC is typically connected to the CAN bus through a USB-to-CAN converter. Tricontinent offers an appropriate converter kit for this purpose (catalog number 0963), which includes the converter, USB cable, and driver software.

Figure 4-11. CAN bus cabling

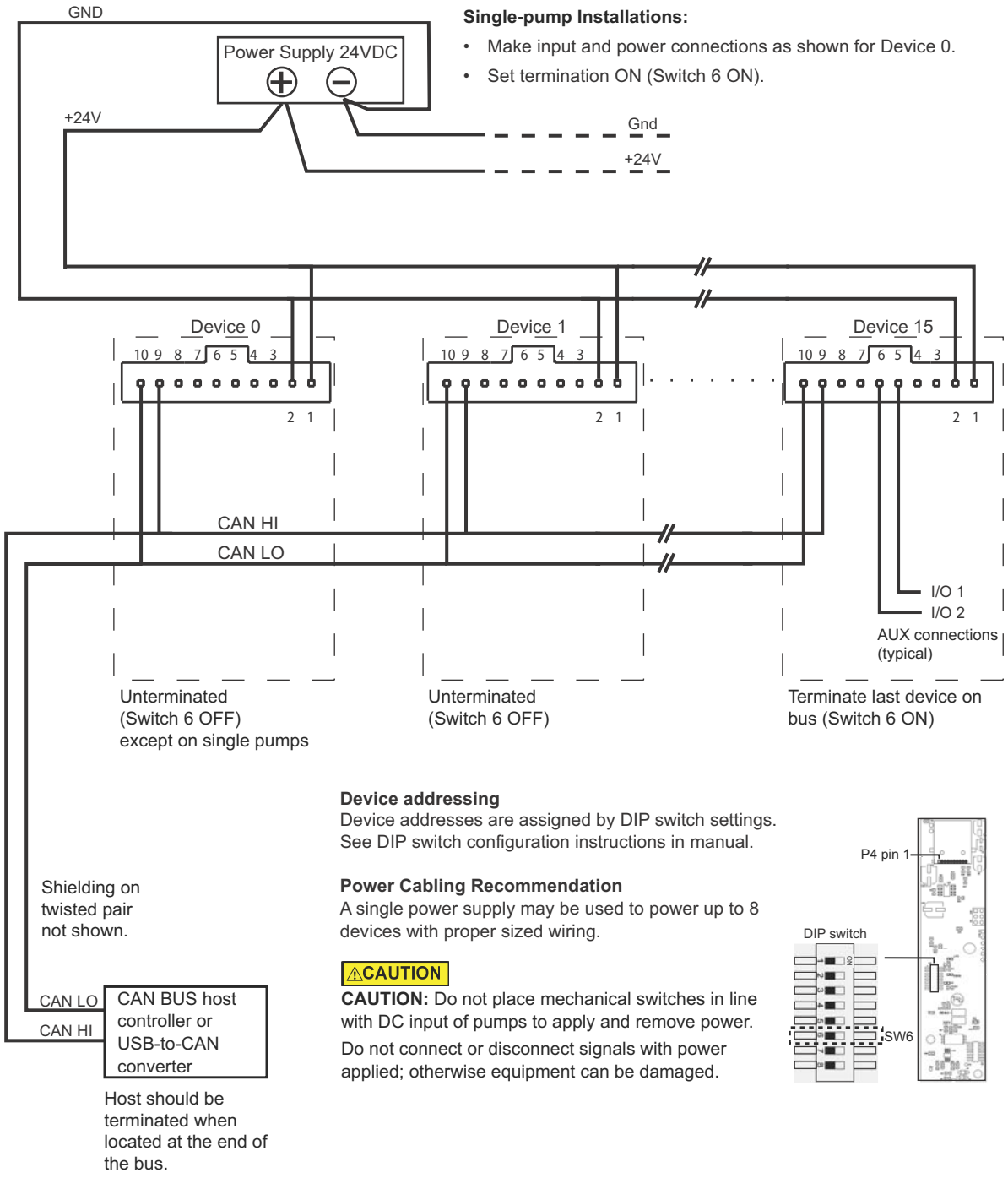

Confirm communication with pump

Before starting:

- Make sure pump is connected, host PC is connected, and power is applied.
- An appropriate driver must be installed as described earlier if using USB for communicating.

Confirm with TCS Pump Commander

Note: The TCS Pump Commander version 2.1.0 or higher is required for the instructions in this manual. Inquire with Customer Service for availability.

1. Ensure SW1 switch 8 is in the default ON position (shown on page 26).This sets the pump communication rate to 9600 baud for RS232/485, and 100K for CAN. Do this whenever first attempting to communicate with a pump.
2. Start TCS Pump Commander. The Pump Communication Setup window (below) should open.[1] If not, press Setup Communication at the top of the screen.
3. Select COM port.

   With the communication cable and converter, if any, attached to the host PC, the available ports will be shown in the Com Port drop-down window. Select the desired port to connect to the pump.

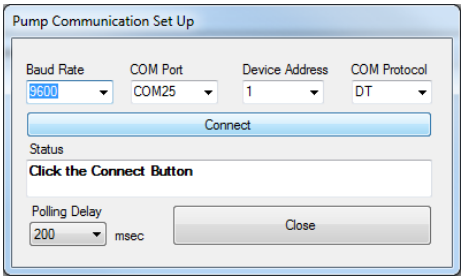

4. Select Baud Rate and Device Address.
   - Baud Rate: If CAN is selected in the COM protocol drop-down window, choose 100K from the Baud Rate drop-down list. Otherwise, it will be set to 9600.
   - Device Address: This is the position of address switches on SW1. If necessary, see Table 4-2 (page 26).s
5. Click the Connect button and see the response in the Status window.
   - “OK” indicates a successful connection.
   - If a “FAILED” response is received, re-check baud rate selection, COM port selection, and device address setting. Check power and wiring also if none of these resolves the problem.

For further information about the TCS Pump Commander, see the help documentation in TCS Pump Commander.

1. The Communication Setup window will open if TCS Pump Commander cannot connect with the same settings previously used.

Note: Once communication has been established, the desired communication bus, communication speeds, and protocols can be selected using the [U] or [u] command. To do this, follow these steps:

1. Make selections. These are shown in Table 5-7 (page 97) and Table 5-8 (page 100).
2. Move DIP switch 8 to the OFF position
3. For the settings to take effect, do one of the following:
   - Power cycle the pump, or
   - Send an [!0] command over the initial connection.

Confirm with terminal emulation program

1. Open the desired terminal emulation program on the host PC.
2. For RS232/RS485, make sure communication settings are as follows:
   - Baud rate: 9600, with switch 8 on DIP array SW1 set to the default ON position. Refer to Table 4-2 (page 26) if necessary.
   - Other settings: data bits 8, parity None, stop bit 1, half duplex if RS485, full duplex if RS232.

   Note: Baud rate setting must be the same as indicated by the position of switch 8 on DIP array SW1.
3. Issue the command string [/1&], where /1 is the address of the pump. This command string requests the firmware version of the pump.

   Note: In DT mode, a carriage return (ODh) is required after the command string.

   - The response format is AZPVVVV: Vxx, YYYY-M-DD. Example: AZP1000: V13, 2020-05-15, where “1000” represents the pump capacity (1000 µL), and V13, 2020-5-15 represents the version and date of the firmware.
   - This confirms communication with the pump has been established.
   - If instead you receive no response or random characters, re-check your communication settings within the communication interface, the COM port selection, and/or communication and power wiring.

Note: Once communication has been established, the desired communication bus, communication speeds, and protocols can be selected using the [U] or [u] command. To do this, follow these steps:

1. Make selections. These are shown in Table 5-7 (page 97) and Table 5-8 (page 100).
2. Move DIP switch 8 to the OFF position.
3. For the settings to take effect, do one of the following:
   - Power cycle the pump, or
   - Send an [!0] command over the initial connection.

Initialize pump

Initialization verifies correct operation and places the plunger into a specific starting position. Initialization is required before any move commands will be accepted.

In the following procedures, default settings are used. Instructions in the next chapter describe how to customize the settings for your instrument design.

Initialize with TCS Pump Commander

Note: LED indicators referred to below are shown on next page.

1. Issue the [ZR] command. Enter the command in the Command String area and press Send String button.

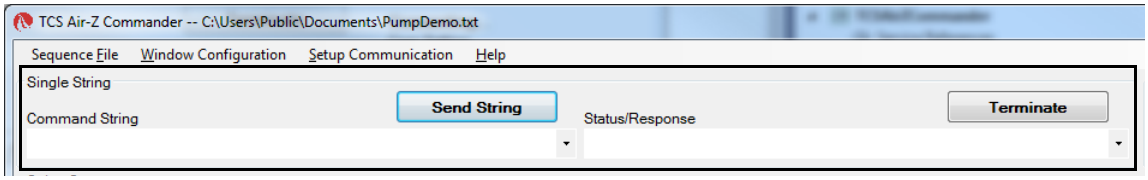

2. Observe pump:
   - The tip ejection mechanism will operate. An “OK” message should appear in the Status/Response area of the screen.
   - The ERR LED will be off, and the LIFE LED will blink slowly. The +5V LED will be lighted (not visible with optional cover installed).
   - If a “Failed” message is received, check communication settings and power, or for something blocking the mechanism.
   - Once TCS Pump Commander shows a status of “OK,” the pump is ready to accept further commands.

Initialize with terminal emulation program

Note: When in DT mode, a carriage return (ODh) is needed after each command string to send it to the pump.

1. Issue the [Z] command. An example would be [/1ZR], where /1 represents the device address of the pump.
2. Observe pump:
   - The tip ejection mechanism will operate.
   - The ERR LED will be off, and the LIFE LED will blink slowly. The +5V LED will be lighted (not visible with optional cover installed).
3. Issue a [Q] command to confirm initialization has been completed, for example [/1Q].
   - If initialization was successful, the response status byte will indicate so. See "Data Terminal (DT) protocol" (page 142). Possible status byte responses are shown in Table 5-11 (page 112).
   - If an error occurred during the initialization, an initialization failure error will be returned in response to the [Q] command. Check communication settings and power, or for something blocking the mechanism.
   - Once initialization is successful, the pump is ready to accept commands.

Check LED indicators

Indicator LEDs are provided to assist in monitoring the functioning of the pump. Please refer to Figure 4-12 and Tables 4-5 and 4-6, below, for LED locations and functions.

Figure 4-12. LED indicators on Air-Z Premier

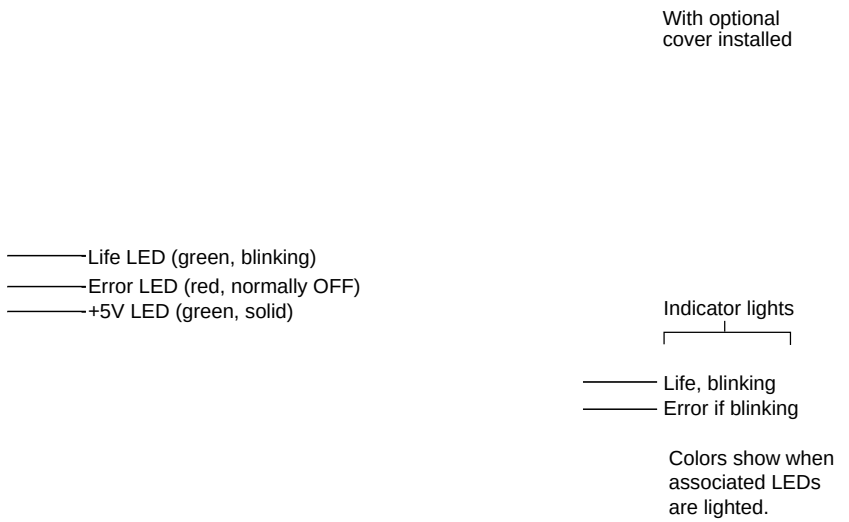

Table 4-5: LED functions

> E u } o } E E } Œ u o ^ š š D v] v P			
Life	Green	Blinking at 1-second rate	CPU is running. Normal operation.
Error	Red	OFF	Blinking indicates error. See Table 4-6 below for details.
+5V	Green	Solid ON	+5V, not visible with optional cover installed.

Table 4-6: Red LED error indications [1]

Number of blinks	Œ Œ } Œ } v] š] } v
None (OFF)	No error
1	Initialization failure
2	Plunger overload error
3	Pressure sensor fault
4	CAN bus failure
5	EEPROM fault

1. For corrective action, see Table 7-2 (page 129).

This page intentionally blank

5 Operating instructions

About this chapter

This chapter describes how to operate the Air-Z Premier Air Displacement Pipette Pump, once physical and electrical installation has been completed as described in the previous chapter.

This chapter includes:

- About this chapter, page 41
- Operation overview, page 42
- Interface options review, page 42
- Operating tips, page 43
- Command guidelines, page 47
- Initializing pump, page 50
- Plunger movements, page 52
- Configuring auxiliary connections, page 66
- Execution control commands, page 68
- Disposable tip commands, page 70
- Liquid level detection, page 71
- Pressure data streaming, page 78
- Operation validation (aspirate/dispense verify), page 83
- Temperature compensation, page 92
- Using EEPROM, page 94
- Standalone operation (AutoRun), page 104
- Report (query) commands, page 105
- Status and error codes, page 110
- Command summaries, page 113

Operation overview

Operation consists of:

- Initializing the pump with settings defined for your application
- Programming moves and making pump settings as described in the rest of this chapter

Interface options review

Interface options are described in the preceding chapter, Installation instructions. The following is a summary. For full information, refer to "Protocol and interface options" (page 17).

Communication standards

The Air-Z Premier Air Displacement Pipette Pump uses the following communication standards.

- RS232
- RS485
- CAN (Controller Area Network)

An integrated RS232-RS485 converter allows RS232 ports to communicate with pumps on the built-in RS485 bus.

Protocols

Three communication protocols are available:

- OEM communications protocol
- Data Terminal (DT) protocol
- CAN (Controller Area Network) protocol

These communication protocols are described in detail in the "Reference information" chapter (page 133).

The Air-Z Premier firmware automatically detects OEM or DT protocol for RS232/RS485 applications.

When not using a terminal emulator program for RS232/RS485, the OEM protocol is recommended. It provides robust error checking and recovery.

⚠CAUTION

CAUTION: Please note that the pump communication buses (RS232/RS485/CAN) use liquid handling industry-developed custom communication protocols (OEM, DT, and CAN). It is possible (but not recommended) for non-pump devices using a different communication protocol to exist on the same RS485 or CAN bus, as long as the non-pump device's protocol does not interfere with the pump bus protocol.

Tricontinent Scientific, Inc. does not encourage or warrant any use of the pump buses with non-pump devices, regardless of information provided by Tricontinent Scientific, Inc. Results may be unsatisfactory.

Operating tips

General operating tips

- Accurate pipetting is a strong function of tip and fluid types. Each combination will require a unique aspiration and dispense strategy.

  Many variables affect the quality of fluid dispensing: temperature, humidity, static electricity, fluid, fluid/tip surface tension, tip geometry (each tip has its own unique behaviors), and plunger velocity. Try to keep the system temperature and pump temperature stable, and let the system and pump come up to steady-state temperatures before operating. As much as possible, avoid opening and closing doors while operating the pump.
- Find velocities and plunger start/stop positions that don't allow the fluid to wrap around the orifice of the tip and stick to the outside of the tip.

  For any given tip and fluid, there is an ideal velocity range for a particular operation. Watch the fluid operation closely for problems that will allow the surface tension to produce random results. Select a velocity that results in smooth meniscus travel while aspirating, and a smooth “jet” of fluid (fast enough) while dispensing that doesn't spatter (too fast).
  - For free (non-contact) dispense, aspirate slowly (e.g., V250-V1000) and dispense more quickly (e.g., V1000-V6000).
  - For contact dispense, aspirate and dispense slowly (e.g., V50).
  - For forward pipetting, aspirate an additional (blowout) volume above the fluid, which will ensure that all the fluid is later dispensed. If you dispense the same number of increments that was aspirated with fluid, there will always be fluid left in the tip due to surface tension. (See "Example pipetting sequence for Air-Z Premier" (page 44).
- Watch for the formation of drips on the tip when dispensing. This can occur because of liquid sheeting on the inside surface of the tip. When this is causing inconsistent dispenses, a “two-stage dispense” can be used where approximately 99% of the available fluid volume is initially dispensed. After this a delay of 500-2000 ms allows the sheeted fluid to run down the tip walls. Then the dispense is completed, along with the blowout volume.

⚠CAUTION

CAUTION: The tip must be empty prior to ejection; otherwise fluid will be dispensed.

Example pipetting sequence for Air-Z Premier

Note: 1 mL tip, distilled water sample, 175 µL aspirate and dispense. Refer to Figure 5-1. Example is for 1000 µL model.

1. **Issue command [A0R].** Moves plunger to position 0 (home).
2. **Issue command [V1000R].** Sets plunger velocity relatively high (1,000 increments/sec).
3. **Issue command [P200R].** Aspirates 200 increments of blowout volume (approximately 75 µL of air). (See A below.)

   Robotics now lowers pump until tip is approximately 1 mm below surface of sample liquid.
4. **Issue command [V250P491R].** Sets plunger velocity lower (250 increments/sec) and aspirates 491 increments of sample (approximately 175 µL). The lower velocity aspirates more accurately. (See B below.)
5. **Issue command [V1000R].** Sets plunger velocity higher again (faster velocities help to evacuate liquid better. Chosen velocity should create continuous stream without spatter.)

   Robotics now raises tip above surface of sample liquid.
6. **Issue command [P100R].** Aspirates 100 increments of trailing air gap (approximately 38 µL). (See C below.)

   Robotics now moves pump/tip to the dispense location.
7. **Issue command [A0R].** Moves plunger to position 0 (dispenses entire contents of tip, including blowout volume).

Figure 5-1. Typical pipetting sequence for Air-Z Premier

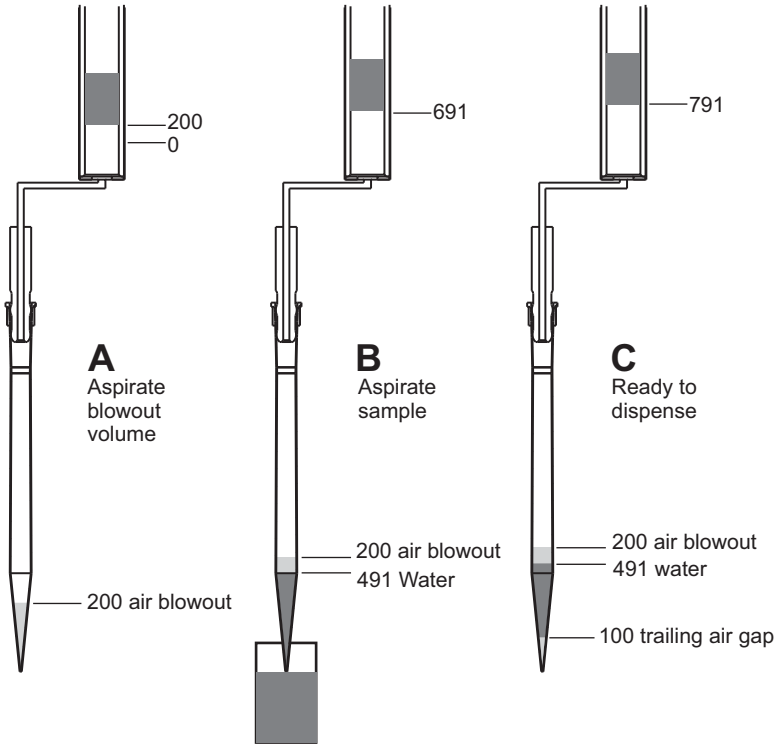

Using an Air-Z Pump for the first time

Become familiar with plunger movements. If this is your first use of an Air-Z pump, take time to become familiar with the plunger initialization and movement commands prior to aspirating fluid. Specifically, practice with the [Z], [A], [P], and [D] commands while observing the pump's response.

The plunger movements caused by these commands are visible on the Air-Z Premier pump, so feedback is immediate. In the Flex pump the plunger is inside the device, so movement feedback is more difficult to obtain. But resting a Flex pump on a table top and performing movement commands provides auditory feedback.

⚠CAUTION

CAUTION: Attempting to aspirate fluid into a tip without a full understanding of the pump can possibly cause fluid to enter the pump, contaminating the device and causing damage. These instructions are intended to help you avoid this situation.

If you do ingest fluid into the pump and require assistance, please contact Tricontinent Customer Service. Do not attempt to disassemble and clean the pump. Doing so may impact performance of the pump and will void the warranty.

Start with large tip. After becoming familiar with the plunger movement commands, a tip can be placed on the pump and fluid aspirated. It is recommended to start with a 1 mL tip (the largest available) and pick up no more than 50% of the tip's capacity. Observe that the fluid volume aspirated is less than the mechanical displacement of the plunger. For example, the 1 mL Air-Z Premier has a mechanical displacement of 0.382 µL/increment. An aspiration command of 1000 increments will therefore displace the plunger 382 µL. If this amount of displacement is commanded after placing the tip into a fluid, the volume of fluid actually aspirated will be less than 382 µL; this is due to fluid surface tension (see the Tip Performance Charts in TCS Pump Commander). Understanding this behavior, that the fluid aspirated will be less than the plunger mechanical displacement, and how to adjust for it safely, can help prevent accidental pump contamination.

As long as the mechanical displacement of the command is *less than or equal to* the tip volume, the commanded displacement is safe. Always calculate the mechanical displacement of a fluid operation, using the correct units (be aware of whether the pump is working in increments [N0] or micro-increments [N1].[1] If the mechanical displacement required is greater than the tip volume in use, cautiously determine the exact amount of plunger displacement needed to aspirate a full tip without pulling a volume that exceeds the tip's capacity.

For example, assume you are attempting to aspirate 1 mL through a 1 mL tip with an Air-Z Premier pump in [N0] mode, which has a mechanical displacement of 0.382 µL/increment. If the target fluid amount is 1 mL, use 1000 µL/0.382 µL/increment = 2617 increments as a starting point. This provides a mechanical volume displacement of 1 mL. Knowing that the fluid actually aspirated will be less than the mechanical volume displacement, this gives you a "safe" starting place, where there is no danger of over-aspiration. From

1. See "Set plunger resolution (increment) mode (N<n>)" (page 53).

this point you can carefully increase the displacement of the aspiration stroke until the desired volume of fluid is obtained.

Move to smaller tips. After working with a 1 mL tip, it is then recommended to move to smaller tips if required by the target fluid operation. Just keep in mind that, for example, a 1 mL pump with a 50 µL tip installed has the mechanical displacement capacity to pull many times the tip volume.

Command guidelines

The Air-Z Premier has a robust command set that permits a wide range of pump actions. Many of the commands have default arguments; these are frequently-used values that, when utilized, can help minimize the length of command strings. Take a moment to familiarize yourself with each command in order to obtain the best performance for your application.

For a quick reference to all commands, see "Command summaries" at the end of this chapter.

Note: All command examples in this section are in DT format.

Command structure

Each command consists of a pump address, one or more commands, and (with exceptions) a Run command [R].

Example: [/2A3000R]

Breakdown:

/	Start of command.
2	Pump address 2 (see "Addressing" below).
A	Move to absolute position.
3000	The magnitude of the move, which is 3000 position increments. The size of an increment is determined by the [N] (increment mode) command.
R	Run. Execute the command string. [R] is not required for certain classes of commands.

Note: In DT mode, a carriage return (ODh) is required after the command string.

Addressing

As part of the communications protocol, every command string must contain an address for the intended pump(s).

Example in DT format: [/2A3000R], where 2 is the device address. There are 16 possible addresses for each Air-Z Premier pump on the bus, set by address switches on the individual pumps.

- For RS232/RS485, device address numbering starts at 1. (The method for setting the address varies among products.)
- For CAN communication, device address numbering begins at 0.
- When using DT or OEM protocol, multiple-device addressing is available. Two pumps, four pumps, or all 16 pumps may be addressed at once.

Note: When using CAN protocol, device addresses may be assigned independently of the address switch(es) on the pump. See "Handling of pump boot requests" (page 149).

For more information about addressing, see "Pump addressing scheme" (page 134).

Command syntax

The syntax used in this manual for describing commands in the command set is as shown here:

Convention	Description
[command]	The name of the command; the command itself (or a string). Commands are case-sensitive. Square brackets are used to denote any single command or command string.
<n>	Operand (command argument). For example, [A<n>] represents the A (absolute move) command and operand <argument>. The argument must be a value within the valid operand range.
0...3143	(Example) valid operand range of the numerical <argument> **Note:** Some operands vary according to the pump volume capacity. In these cases, the operands are expressed in the form 1000/500, representing 1000 µL and 500 µL respectively. For example, the [A] command argument range for specifying volume moves: 0...1200.626/600.313 This would mean a range of 0....1200.626 for the 1000 µL version of the pump, and 0...600.313 for the 500 µL version of the pump.
(n)	Default <argument>, if no argument is included in command when issued
{n}	Power-up default <argument> **Note:** If there is no default value provided for an <argument> in a command description, a value must be included with the command for the command to be valid.

The symbols [ ], <>, ( ), and { } are not to be sent as part of a command.

Command execution guidelines

To issue commands properly, keep the following in mind:

- Commands are case-sensitive.
- For DT and OEM protocol, the host must allow adequate time for the pump to process commands. For details, see "OEM and DT timing and polling guidelines" (page 135). All commands except report commands, the status query command [Q], and some EEPROM configuration commands, must be followed by an [R] (Run) command. If a command is sent without a required [R] (Run) command, it is placed into the buffer without being executed. It can be run at a later time by issuing an [R] command.
- Space characters (ASCII 32) in commands are ignored by the pump. If using the OEM protocol, the checksum must include the space character.
- In DT mode, a carriage return (0Dh) is required after each command string (following the [R] command).
- Single or multiple commands can be sent to the pump within a string.

  For example:

  - A single command such as [A3000R] moves the plunger to position 3000.
  - A multi-command string such as [A3000A0R] moves the plunger to position 3000 and then returns the plunger to the home position 0.
- The pump's command buffer holds a maximum of 128 characters.
- Once a command or command string is in the process of being executed, the pump is busy and will not accept new commands until the sequence is completed. If a new command is issued while the pump is busy, a command overflow error code will be issued and the command string will be ignored. Exceptions to this rule include the [T] (terminate), [V] (top velocity), [Q], and most other report commands. The busy/idle status is determined by polling the pump with the [Q] command.
- When a command is sent, the pump answers immediately (except in RS232/RS485 multi-address mode, that is, when the host is addressing multiple pumps).
- If an invalid command is sent within a command string, the pump reports an error immediately. If there was an invalid parameter, in certain cases the string will execute until the invalid parameter is reached and then stop. In all cases, the [Q] (status query) command may be used to read back errors that have not already been read or returned as part of the command responses.

Execution controls

- Command strings may include command characters that modify command execution. Examples are the [R] command, [H] halt and wait for an external signal, and commands that initiate loops (repeat sequences) [g] [G]. For details on these commands, see "Execution control commands" (page 68).

Initializing pump

Initialization is required before any move commands will be accepted. Commands that do not cause plunger movement do not require pump initialization. These include, for example, velocity settings, report commands, streaming ([f]), pressure calibration ([a]), capacitive detect ([^]), etc.

During installation (Chapter 4), an initialization was performed using default settings. Your application is likely to require more specific settings than those the defaults provide.

This section describes the initialization sequence, and the commands and options available for customizing initialization settings to accommodate your application.

Once the pump is initialized with the settings defined for your application, operation can proceed.

Note: During initialization, all motion parameters are set to default values.

Initialization sequence

The typical initialization sequence is as follows:

1. If the plunger is positioned such that the home opto flag is blocked, the plunger will aspirate to move the opto flag out of the opto sensor.
2. The plunger dispenses until the opto flag trips the opto sensor. This position is recorded and the sensor continues to move in the dispense direction until the plunger finds the bottom of the stroke. The bottom-of-stroke position is recorded as the maximum allowed dispense direction stroke, and is the stroke length used to eject a tip. If observing an initialization cycle, the tip ejector can be seen to also cycle through its motion.
3. The plunger then moves in the aspiration direction, passing the opto trip position, and continuing until it reaches the position defined by [u12]. This position has a default value of 250 increments in the aspiration direction past the opto trip position. This position is then defined as home (absolute zero). The [u12] offset location ensures that the plunger fully disengages the tip ejection mechanism.

   Also:

   - The pressure sensor is calibrated to read 410 counts at ambient atmospheric pressure.
   - All programmable functions stored in EEPROM are set to default.
   - All plunger velocity parameters ([V], [v], [c] and [L]) are reset to default values. Increment mode [N] retains its value.

The complete set of initialization commands is described on the following pages.

Initialization commands

Initialize pump (Z or W) For plunger movement operations, the pump must first be initialized using the [Z] or [W] command. The [Z] command initializes the pump and finds the maximum available tip eject stroke. The [Z] command will eject a tip if present on the tip adapter. The [W] command initializes the pump without a tip eject stroke. When initializing with [W], a tip eject is still possible ([E] command) immediately afterwards as the tip eject stroke length is stored in EEPROM after every [Z] command.

Note: To ensure that the pump initialized successfully, send a [Q] command after each [Z] or [W] command. Any initialization errors will be returned.

Simulate pump initialization (z<n>)

The [z] command simulates an initialization of the pump. However, there is no movement of the plunger. The position counter is set to <n>, which becomes home for the plunger. For example, if the current absolute position is 1000, and [z1010R] is issued, the home for the plunger is moved 10 increments. (The absolute position will now read 1010 after the next [z] command is issued.)

Arguments:

<n>	0...3143	In normal increment (N0) mode
<n>	0...50288	In micro-increment (N1) mode
<n>	0...1200.626/ 600.313	In µL (N2) mode
	(0)	Default argument

Note: Maximum argument may be set lower, according to tip size selected, using the configuration command [u1].

This command can be used to recover from a plunger overload error. Afterwards, the pump should be reinitialized using the [Z] or [W] command to ensure the correct home position is in use and lost steps have not compromised pump function.

⚠CAUTION

CAUTION: Incorrect use of this command can result in unexpected behavior, as the position count will not be referenced to true home (zero) position.

Plunger movements

The following pages describe how to make plunger movements on the Air-Z Premier Air Displacement Pipette Pump.

Arguments for the commands vary according to the increment (resolution) mode. For this reason, the increment mode should be decided upon before programming begins. See "Increments and resolution" below.

Increments and resolution

Increments

The term “increment” is used in the commands for plunger moves and positions, and for setting velocity/acceleration parameters.

An increment is the smallest available plunger movement, and indicates the available positioning resolution. The size of an increment will vary with the setting of the [N] command, as described on page 53.

The increments in the higher resolution mode are referred to as “micro-increments” in this manual.

Set plunger resolution (increment) mode (N<n>)

The [N] command sets the increment mode. The increment mode either determines the resolution of plunger movements in linear increments, or sets the pump to interpret move commands in units of volume (microliters). It determines how all affected motion commands will be reported as well as interpreted. The increment mode affects velocity and acceleration settings as well as positioning.

Arguments:

<n>	0	N0, normal increment mode
<n>	1	N1, micro-increment mode. 16X resolution of the normal increment mode
<n>	2	N2, µL mode. Move commands are expressed in µL. Also see "Detailed N2 mode operation" (page 53).
	{0}	Power-up default argument, normal increment mode

Note: You cannot change the increment mode and issue commands in the new mode in the same string. First the [N] command must be issued alone (e.g., [N1R]). Only then can you issue commands in the new increment mode.

Increment mode vs. maximum stroke (1000/500 µL models):

Increment mode	maximum stroke or volume
N0	3143 increments (default value)
N1	50288 micro-increments (default value)
N2	1200.626/500.313 µL[1]

Note: Value of maximum stroke may be set lower, according to tip size selected, using the configuration command [u1].

1. Within the pump firmware, N2 mode µL input values are always converted to micro-increments; and when reporting data, micro-increments are converted to µL when assembling a query response. The 1000 µL Air-Z Premier mechanical displacement is 0.301 µL per increment. Hence, 3700*0.301=1113.7 illustrates how the stroke length in µL is determined.

Detailed N2 mode operation

When a command is sent to move a specific number of microliters (µL), the µL number is converted by firmware to the number of increments the plunger must move in order to displace the specified volume.

In the Air-Z pumps, N2 operation may use either a linear mode or a non-linear mode for conversion. These are described in Table 5-1 (page 54).

In the linear mode, the conversion from volume to increments (distance) follows a fixed numerical factor. The factor is either the pump's inherent mechanical displacement factor (for absolute positioning), or a value set by the [u16] command (for pickup and dispense).

In the non-linear mode, conversion for absolute moves is again determined by the pump's mechanical displacement factor. For pickup and dispense, the nonlinear character of the pump's conversion from µL to increments is corrected for with two variables, m and b. This increases the conversion accuracy. Default values for m and b can be used, or custom values can be derived utilizing the Tip Performance Chart in TCS Pump Commander.

The linear mode is selected with the [u38_0] command; the non-linear mode is selected with the [u38_1] command. The linear mode is default. See Table 5-1 below and the command descriptions that follow.

Table 5-1: Detailed N2 mode operation

Command	[u38_0] - Linear mode	[u38_1] - Non-linear mode
[A] Move to absolute position	Always uses the pump's internal mechanical displacement factor [1] to convert from µL to increments. Example for 1000 µL Premier: 100 µL/(0.382 µL/inc) = 261.780 inc	Always uses the pump's internal mechanical displacement factor to convert from µL to increments. Example for 1000 µL Premier: 100µL/(0.382µL/inc) = 261.780 inc
[P] Pickup and [D] Dispense	Uses the [u16] value to convert between µL and increments. Example for 1000 µL Premier: [N2], [P175], and [u16_360]: 175µL/(0.360 µL/inc) = 486.111 inc	Uses the currently loaded m and b parameters to convert from µL to increments. [2] Example for 1000 µL Premier with [N2], [P175], [m0.955,6.629], and p_mech= 0.382 µL/inc (p_mech is pump mechanical displacement in µL/inc). The conversion formula is: v(x)=d*m*x-b, or x(v) = (v+b)/(p_mech*m) If v=175 µL, then x(175 µL) = (175 µL+6.629 µL)/(0.382 µL/inc*0.995)= 497.872 inc
[v],[V],[c]	All velocity commands use the pump's internal mechanical displacement factor to convert from µL to increments. Example for 1000 µL Air-Z Premier: (100 µL/sec)/(0.382 µL/inc) = 261.780 inc/sec	

1. The mechanical displacement factor for the 500 µL Air-Z Premier is 0.191 µL/increment.
2. The m and b values shown in the formulas above are set directly with the [x] command or loaded from EEPROM storage using [u18]. See the command descriptions below for [x<n1>,<n2>] and [u18_x].

Set m and b values directly (x<n1>,<n2>)

The [x] command sets the values of the m and b N2 mode variables by direct entry. This is done on-the-fly. It is expected that this command would be used when utilizing many m and b parameters throughout a complex set of fluid operations. When fewer are needed, e.g. four or less, using the [u18] command may be more practical.

Arguments:

<n1>	0.01...3.000	value[1] of m (slope scale coefficient. In the Tip Performance Chart, this is "Slope (µL/inc)."
<n2>	-10.000...10.000	value of b (y intercept, expressed in µL), from the Tip Performance Chart.

1. The m and b values can be derived using the Tip Performance Chart located in TCS Pump Commander.

Example:

[x0.955,6.629R] sets variables to m=0.955 and b=6.629.

Set m and b values from EEPROM (u18_x)

The [u18_x] command loads the m and b variables from the [u39] and [u40] EEPROM storage locations.

Arguments:

x	0...3	Values for m and b, representing test results for the conditions indicated below. Default values are provided; these can be edited using [u39_x,y] and [u40_x,y].
	0	Default firmware value is for air dispense forward pipetting with a 1 mL tip and distilled water.
	1	Default firmware value is for air dispense forward pipetting with a 200 µL tip and distilled water.
	2	Default firmware value is for air dispense reverse pipetting with a 1 mL tip and distilled water.
	3	Default firmware value is for air dispense reverse pipetting with a 200 µL tip and distilled water.

Example:

[u18_0] will load firmware variable *m* = 0.955 and *b* = 6.629 when [u39] and [u40] are at their factory default values. See [u39_x,y] and [u40_x,y] in Table 5-8 (page 100).

Note: [?28] reports the [u18] EEPROM values.

Fluidic resolution

Fluidic resolution is based on the syringe diameter and plunger motion, and varies according to the increment mode selected. The following table shows fluidic resolution for the two recommended increment modes, N0 and N1. This information can be used to determine maximum stroke for different tip sizes.

Table 5-2: Fluidic resolution[1]

Increment Mode	Description	Default resolution 1000 µL	Default resolution 500 µL
N0	Normal increment mode	0.382 µL/increment	0.191 µL/increment
N1	High resolution micro-increment mode (16X normal increment mode)	0.023 µL/micro-increment	0.012 µL/micro-increment

1. Maximum theoretical aspiration volume of the 1000 µL Air-Z Premier is 1200 µL. Maximum theoretical aspiration volume of the 500 µL Air-Z Premier is 600 µL.

Plunger move commands

Move pump to absolute position (A<n>)

The [A] command moves the plunger to the absolute position <n> (distance from home position). Note that the movement could be either an aspiration or a dispense, depending on the starting position of the plunger.

Arguments:

<n>	0...3143	In normal increment (N0) mode
<n>	0...50288	In micro-increment (N1) mode
<n>	0...1200.626/600.313	In µL (N2) mode (1000 µL/500 µL pump models). See Note 2 below.
	(0)	Default argument

Examples:

- [A300R] moves the plunger to absolute position 300 increments ([N0] mode).
- [A600R] moves the plunger to absolute position 600 micro-increments ([N1] mode).
- [A250.000R] moves the plunger to absolute position 250 µL ([N2] mode).

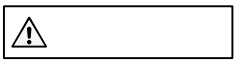

CAUTION: Do not aspirate a fluid volume larger than the tip capacity. Otherwise, fluids can be aspirated into the pump. This can cause damage to sensors and affect pump performance. Always adjust the maximum argument to fit the tip size in use.

Notes:

1. Maximum allowed stroke can be changed with the configuration command [u1].
2. In [N2] mode, the plunger travel distance is converted from µL to increments. See "Detailed N2 mode operation" (page 53).

Configuring plunger movement

Configuration commands are used to set up the pump for specific operations. These include settings for plunger velocity, acceleration, backlash, and motor current (motor current settings are factory-only).

Velocity and acceleration configuration commands

Velocity and acceleration configuration commands are used to control the motion of the plunger. The motion profile is trapezoidal, with the plunger movement structured into three phases:

- Ramping Up. Plunger movement begins at the start velocity [v] and accelerates with the programmed acceleration slope (<n1> argument of the [L] command) to the constant or top velocity [V].
- Constant or top velocity. The plunger moves at the constant or top velocity [V]. Plunger velocity is programmed in increments/sec or micro-increments/sec [V] or in preset speeds [S]. The actual time the plunger travels depends on the ramping up and down slope. If the plunger move is short, it may never reach top velocity.
- Ramping down. The plunger decelerates based on the programmed deceleration slope (<n2> argument of the [L] command). To enhance fluid break-off, the Cutoff command [c] can be used to define the end velocity of the plunger just before it stops.

For each plunger move, the firmware calculates how many increments the plunger must travel during each phase in order to move the total number of increments commanded.

The top velocity can be changed on the fly (while the plunger is moving) using the [V] command. When the move completes, the top velocity reverts to its original value.

In the N0 and N1 increment modes, velocity and acceleration settings are configured and reported in increments/sec (N0) or micro-increments)/sec (N1). In the N2 mode, they are configured and reported in microliters.

Using TCS Pump Commander to help configure plunger movement

TCS Pump Commander allows you to view the profile of plunger movements in real time while developing velocity and acceleration commands, using the Trapezoidal Motion Tool window.

Set acceleration/deceleration slopes (L<n1>, <n2>)

During the beginning and end of a move, the plunger velocity ramps up and down respectively. The ramps are programmed using the slope [L] command. It is calculated as <n> x 2500 increments/sec^2.

Arguments:

<n1>	1...20	Slope code for acceleration. See table below.
<n2>	1...20	Slope code for deceleration. See table below.
	{14}	Power-up default argument for both <n1> and <n2>

Note: The operation of the [L] command is not affected by the increment mode command [N]. For example, if you enter [L1,1] while in the N0 mode, the acceleration and deceleration ramps are both 2,500 increments/sec^2. If in the N1 mode, the acceleration is 40,000 micro-increments/sec^2. Regardless of whether in the N0 or N1 mode, slope code 1 results in the same acceleration/deceleration.

The corresponding slopes in N0 and N1 units are listed below:

Table 5-3: Slope codes

Slope code	N0 mode: increments/sec^2	N1 mode: micro-increments/sec^2
1	2,500	40,000
2	5,000	80,000
3	7,500	120,000
4	10,000	160,000
5	12,500	200,000
6	15,000	240,000
7	17,500	280,000
8	20,000	320,000
9	22,500	360,000
10	25,000	400,000
11	27,500	440,000
12	30,000	480,000
13	32,500	520,000
14	35,000	560,000
15	37,500	600,000
16	40,000	640,000
17	42,500	680,000
18	45,000	720,000
19	47,500	760,000
20	50,000	800,000

Interaction between velocity settings [v], [V], and [c]

The velocity settings described below interact according to these rules:

- The top velocity [V] must always be equal to or higher than the start velocity [v] and cutoff velocity [c].
- If a setting is made that results in either of these being higher than [V], they will be lowered to equal the top velocity [V]. This may happen as a result of [V] being lowered or [v] and/or [c] being raised by the user.
- If [V] is later raised to equal or exceed the set value of [v] and/or [c], [v] and/or [c] will not be restored to their user-set values. They must be reset by the user.

In addition:

- The start velocity [v] must always be less than or equal to the cutoff velocity, that is, [v] < = [c]
- If an attempt is made to lower the cutoff velocity to less than the start velocity by changing either parameter, the cutoff velocity will be automatically set to equal the start velocity.
- The changes made to [v] and [c] described above do not result in an argument error.

Querying for [v] or [c] will always report the value that the pump is currently using.

Set start velocity (v<n>)

The [v] command (lower case v) sets the velocity at which the plunger begins its movement. After beginning at the start velocity, the plunger will ramp up (increase) to the top velocity. The slope of the ramp is set by the <n1> argument of the [L] command.

Arguments:

<n>	0...1000	Increments/sec in normal increment (N0) mode
<n>	0...16000	Micro-increments/sec in micro-increment (N1) mode
<n>	0...382.000/191.000	µL/sec in µL (N2) mode (1000 µL/500µL pump models)
	{0}	Power-up default argument (increments/sec)

The start velocity should be set lower than top velocity [V].

Note: This setting will be affected if it is higher than the top velocity setting [V] or higher than the cutoff velocity [c]. Refer to "Interaction between velocity settings [v], [V], and [c]" above.

Set top velocity (V<n>)

The [V] command (uppercase V) sets the top velocity of the plunger.
Arguments:

<n>	0...8000	Increments/sec in normal increment (N0) mode
<n>	0...128000	Micro-increments/sec in micro-increment (N1) mode
<n>	0...3056.000/1528.000	µL/sec in µL (N2) mode (1000 µL/500 µL pump models) Maximum argument depends on the value of [u16].
	{1400}	Power-up default argument (increments/sec)

Note: This setting can be affected if it is equal to or less than [v] and/or [c]. See "Interaction between velocity settings [v], [V], and [c]" (page 62).

The top velocity can be changed on the fly, that is, while the plunger is moving. When the move completes, the velocity reverts back to its original value. Therefore, on-the-fly velocity changes only affect the current move.

Set cutoff velocity (c<n>)

The [c] command sets the cutoff velocity. The cutoff velocity is the velocity at which the plunger ends its movement. The plunger velocity will slope down (decelerate) from the top velocity [V]. The slope is set by the <n2> argument of the [L] command.

Arguments:

<n>	0...1950	Increments/sec in normal increment (N0) mode
<n>	0...31200	Micro-increments/sec in micro-increment (N1) mode
<n>	0...744.900/372.450	µL/sec in µL (N2) mode (1000 µL/500 µL pump models)
	{900}	Power-up default argument (increments/sec)

Note: This setting can be affected if it is higher than the top velocity setting [V] or lower than the start velocity [v]. See "Interaction between velocity settings [v], [V], and [c]" (page 62).

Set a defined speed (S<n>)

The [S] command sets the top velocity [V] using the predefined speed codes shown in Table 5-4, below.

Argument:

<n>	0...40	Speed code (see Table 5-4 below)
	{11}	Power-up default argument

These speeds do not cover the full range of speeds the plunger can travel. They are commonly used velocities provided for convenience. The [S] command sets top velocity [V] without changing start velocity [v], acceleration slope [L], or cutoff velocity [c] except under the following condition:

If the cutoff velocity [c] or start velocity [v] is higher than the desired top velocity [V], the cutoff velocity [c] or start velocity [v] is lowered to equal the top velocity [V]. See "Interaction between velocity settings [v], [V], and [c]" (page 62).

Note: The speed code is not affected by the [N] command, but the increments are, as shown below. The actual physical speed remains the same.

Table 5-4: Predefined speed codes

Speed code [S<n>]	N0 mode: increments/sec	N1 mode: micro-increments/sec
0	6,000	96,000
1	5,600	89,600
2	5,000	80,000
3	4,400	70,400
4	3,800	60,800
5	3,200	51,200
6	2,600	41,600
7	2,200	35,200
8	2,000	32,000
9	1,800	28,800
10	1,600	25,600
11	1,400	22,400
12	1,200	19,200
13	1,000	16,000
14	800	12,800
15	600	9,600
16	400	6,400
17	200	3,200
18	190	3,040
19	180	2,880
20	170	2,720

Speed code [S<n>]	N0 mode: increments/sec	N1 mode: micro-increments/sec
21	160	2,560
22	150	2,400
23	140	2,240
24	130	2,080
25	120	1,920
26	110	1,760
27	100	1,600
28	90	1,440
29	80	1,280
30	70	1,120
31	60	960
32	50	800
33	40	640
34	30	480
35	20	320
36	18	288
37	16	256
38	14	224
39	12	192
40	10	160

Set backlash increments (K<n>)

The [K] command sets the backlash distance <n> increments.

Arguments:

<n>	0...32	In normal increment (N0) mode
<n>	0...256	In micro-increment (N1) mode
<n>	0...12.224/6.112	In µL (N2) mode (1000 µL/500 µL pump models)
	{0}	Power-up default argument (increments)

When the pump drive motor reverses direction, the plunger will not move until the backlash due to mechanical play within the system is taken up. To provide this compensation, during aspiration the plunger moves up (aspirate direction) <n> additional distance, then backs down (dispense direction) <n> additional distance.

Note: This command is included for compatibility reasons only. For pipette pumps, backlash increments is always set to zero, since any backlash is eliminated by the blowout volume used before aspiration of sample fluid begins.

Set pump motor holding current (h<n>)

Note: For factory use only.

Sets the pump's motor holding current (current when idle) to the <n> value specified in percent of maximum. On power-up, this value is set to the default value stored in EEPROM.

⚠WARNING

WARNING! Improper current setting can result in excess heat, which can damage the pump and potentially cause burn injuries if touched.

Arguments:

<n>	1...100	% of maximum current
	{10}	Power-up default argument stored in EEPROM

Set pump motor run current (m<n>)

Note: For factory use only

Sets the pump motor run current (current when moving) to the <n> value specified in percent of maximum. On power-up, this value is set to the default value stored in EEPROM.

⚠WARNING

WARNING! Improper current setting can result in excess heat, which can damage the pump and potentially cause burn injuries if touched.

Arguments:

<n>	1...100	% of maximum current
	{50}	Power-up default argument stored in EEPROM

Configuring auxiliary connections

Auxiliary pin functions

The auxiliary pins on connector P4 can be configured for a variety of functions, listed here.

For programming details, see [U] commands at "Set pump configuration (U<n>)" (page 97) and the [J] command (described below). For electrical characteristics, see "Pin assignments and mating connector information" (page 28).

Aux I/O 1 functions

Auxiliary I/O 1 (pin 5 of P4) is always an output. Its functions can be set by issuing the following [U] commands, and/or the [J] command (below):

- [U70] = LLD (liquid level detect) output, active high (default)
- [U71] = LLD output, active low
- [U73] = General-purpose output. High or low condition is controlled by the [J] command, described below.

Notes:

- A power cycle or [!0] (pump reset) command is required for [U] commands to take effect.
- The Aux I/O 1 LLD outputs are automatically reset whenever a [t], [B], or [^] command is issued.

Set auxiliary output I/O 1 high or low (J<n>)

The [J] command sets I/O 1 high or low depending on the value of <n>.

For this command to have an effect, the I/O 1 pin must be configured as a general-purpose output by issuing [U73].

Arguments:

<n>	0	Set I/O 1 low
<n>	1	Set I/O 1 high
	(0)	Default argument

Note: With the DT and OEM protocols, an alternative to polling for command completion is to use the [J] command to notify the host of command completion.

Example:

First the [J] command is enabled by issuing [U73]. The host then sends [J0V50A2000J1R]. The [J0] at the beginning of the command string sets the I/O 1 pin low. After the motion is complete, [J1] at the end of the command string sets I/O 1 high. The host can monitor this signal and query status after it transitions high, signaling completion of the movement.

This method should only be used for commands or command strings that yield plunger movement. This technique cannot be used with immediate commands such as [T], [Q], and report commands.

Aux I/O 2 functions

Auxiliary I/O 2 (pin 6 of P4) can be used as an input or an output. It can be configured for one of the following functions by issuing a [U] command:

- [U74] = General purpose input (default). This setting allows the pump to be triggered by an external device such as when it is used with the [H] command. When configured as an input, the I/O 2 pin has a low pull-up resistance and a debounce time of 1 ms.
- [U75] = Emergency brake input (active-high external terminate that acts like the [T] command). The emergency brake input is functional for the [A], [P], [D], [t], and [B] commands. Electrical input characteristics are the same as for the general purpose Input.
- [U76] = Tip loss high output
- [U77] = Tip loss low output

Note: When configured as an output, I/O 2 will be reset (de-asserted) if an [r] command is issued.

Execution control commands

Execute command or command string (R)

The [R] command tells the pump to execute (run) a new or previously loaded but unexecuted command string. This command will also cause the resumption of a halted [H] command string.

- Commands containing [R] at the end of the string will execute immediately. If the command or command string is sent without a required [R], it is placed in the command buffer. There are exceptions; some commands do not require the [R].
- Sending an [R] alone will execute the last unexecuted command string in the buffer. Sending another [R] will not repeat the command string that was previously executed.

Execute the last command string (X)

The [X] command repeats the most recently executed command string.

Repeat command sequence, or loop (G<n>)

The [G] command repeats a command or command string the specified number of times. The [G] command can be specified to repeat up to 50,000 times, and can be used with the [g] command to nest up to 10 loops.

If a [GR] or a [G0R] is sent, the sequence is repeated indefinitely or until a termination command [T] is issued.

Arguments:

<n>	0...50000	Number of times to repeat loop
	(0)	Default argument (repeat indefinitely)

Example:

[A3000A0G10R] moves the plunger to position 3000, then back to position 0. This sequence is repeated ten times.

Mark start of a repeat sequence, or loop (g)

The [g] command is used in conjunction with the [G] command. The [g] command marks the beginning of a repeat sequence (loop) that occurs within a command string (i.e., the entire string is not repeated). The [g] command can be used with the [G] command to nest up to 10 loops. Without the [g] command, the loop starts at the first command in the string.

Example of loop nesting:

[A0gP50gP100D100G10G5R]

Breakdown:

A0	Move plunger to position 0.
g	Start outer loop.
P50	Move plunger down 50 increments.
g	Start inner loop.
P100	Move plunger down 100 increments.
D100	Move plunger up 100 increments.
G10	Go to inner loop start, repeat 10 times.
G5	Go to outer loop start, repeat 5 times.
R	Execute command string.

Delay command execution (M<n>)

The [M] command delays execution of a command for <n> milliseconds. This command is typically used to allow time for liquid in the disposable tip to come to rest after the plunger reaches its final position, thereby enhancing precision.

Arguments:

<n>	0...30000	Milliseconds
	(100)	Default argument

Halt command execution (H)

The [H] command is used within a command string to halt execution of the string. To resume execution, an [R] command must be issued or the appropriate signal on I/O 2 must be received.

If I/O 2 (connector P4 pin 6) is configured to the factory default as a general-purpose input (see command [U74]), the string will resume execution if I/O 2 is pulled low. This allows the pump to be triggered by an external device for resuming command execution. See also "Auxiliary pin functions" (page 66).

Terminate (T)

The [T] command immediately terminates any executing command string. If the plunger is moving, it is brought to rest following the deceleration slope set by the <n2> argument of the [L] command.

Clear command buffer (C)

The [C] command clears the currently-loaded command string.

Disposable tip commands

Eject tip (E<n>)

The [E] command ejects a tip by moving the plunger in the dispense direction. Once the plunger moves past the home position, it pushes on the tip ejector mechanism. After ejection the plunger returns to the home position, allowing the tip ejector to return to its inactive position.

Arguments:

<n>	0	Use tip sensor to check for successful tip ejection and for tip presence before ejection.
<n>	1	Do not use tip sensor to check for successful tip ejection/presence.
	(0)	Default argument

Note: The [E] command cancels an active [Y] command.

⚠CAUTION

CAUTION: The tip must be empty prior to ejection; otherwise fluid will be dispensed.

Tip loss commands

Check for unexpected tip loss (Y)

When the [Y] command is issued, the pump will continually check the tip sensor for tip presence. If a tip is not in place, an error code will be set and remain until a [y] or [E] clears the error. The I/O 2 pin on P4, if configured as tip sensor output, will also be asserted. Refer to "Auxiliary pin functions" (page 66).

As an alternative to the [Y] command, the tip sensor can be directly queried using the [?31] report command.

Note: An active [Y] command is canceled by the [E] command or a [y] command. Either of these will clear a tip loss error.

Reset tip sensor output (y)

The [y] command resets, or de-asserts, the tip sensor output (I/O 2 output on P4). I/O 2 must be configured as a tip loss output. See "Auxiliary pin functions" (page 66).

Note:

- The [y] command will cancel an active [Y] command.

The tip sensor output is automatically reset when a [Y] command is issued.

Liquid level detection

Overview

There are three methods for liquid level detection with the Air-Z Premier:

Pressure liquid level detect (pLLD)

Pressure liquid level detection uses a pressure sensor to detect pressure changes when the tip contacts a liquid. This requires the pump to be aspirating or dispensing while monitoring for pressure changes. The pLLD function is initiated using the [t] command.

Capacitive liquid level detect (cLLD)

Capacitive liquid level detection senses changes in capacitance when the tip touches a liquid. This mode requires the use of a conductive tip. Usually it is more sensitive and faster than pLLD. Also, unlike pLLD, it doesn't require plunger movement. The cLLD function is initiated using the [^] command.

Hybrid liquid level detect (hLLD)

Hybrid liquid level detection utilizes both the capacitive and pressure methods. This mode requires the use of a conductive tip.

Liquid is first detected using the capacitance method, followed by pressure sensing. The hLLD function is initiated using the [B] command.

Note: For liquid level detection, be aware that after the tip is pulled from the fluid, there is very likely a liquid diaphragm stretched across the tip orifice. Before performing an aspiration, this diaphragm should be broken either with a high-velocity blowout of the remaining pLLD volume or an aspiration/dispense cycle of the plunger. If the diaphragm is left in place, the next liquid aspiration will be less consistent because the diaphragm has created a closed container with an unknown starting pressure inside the tip. The internal tip pressure should be released to atmosphere each fluid cycle for consistent results.

Using TCS Pump Commander to assist with liquid level detection

The TCS Pump Commander Pressure Monitor Chart provides visual tools to assist with determining the correct pressure or capacitance thresholds for detecting the liquid level. Once pressure gain [p] is selected (for pLLD only), a pLLD or cLLD operation can be performed to see the pressure rise for any selected [p] and [V] value. An appropriate threshold [t] can then be selected based on the results. See the help documentation in TCS Pump Commander.

Liquid level detect commands

Pressure liquid level detect (pLLD), aspirate or dispense (t<n1>,<n2>)

The [t] command allows the pump to detect a liquid (or other) surface. The pump will either aspirate or dispense as specified by <n2>. Once the measured pressure threshold <n1> is exceeded, the plunger will stop moving and the command will be completed, reporting idle. The output line, I/O 1, will also be asserted if configured as an LLD output.

Arguments:

<n1>	0...1023	Pressure threshold
<n2>	0 or 1	0 = dispense, 1 = aspirate
	(0)	Default argument for <n2>

Once the [t] command begins executing and aspiration or dispensing starts, the pressure is measured after a delay specified by [u15] (P_{start}). The factory default is 100 ms. This allows the pressure to reach a steady state after motion begins. During the aspiration or dispense, the pressure is continuously measured ($P_{dispense}$ / $P_{aspirate}$). The plunger will stop moving and the command successfully completes when:

- If dispensing, a pressure increase occurs that exceeds the threshold, or:
  ($P_{dispense}$ - P_{start}) > <n1>
- If aspirating, a pressure decrease occurs that exceeds the threshold, or:
  ($P_{aspirate}$ - P_{start}) < <n1>

If the plunger finishes the movement before the pressure threshold is exceeded, an LLD error code will be returned in response to a [Q] command.

Dispense example:

To use the pressure sensor for pLLD while dispensing, the following command string may be issued:

[V6000A3143M100V100p4t50,0R]

Breakdown:

V6000A3143	Aspirate a full stroke at plunger velocity of 6000 increments/sec.
M100	Delay 100 ms. Allows pressure to equalize after the plunger changes direction from aspirating to dispensing.
V100	Set velocity to 100 increments/sec.
p4	Set pressure sensor gain to maximum.
t50,0	Dispense while moving plunger toward fluid. If pressure threshold of 50 is exceeded, plunger will stop moving and the command will complete.
R	Run the string.

Aspirate example:

To use the pressure sensor for pLLD while aspirating, the following command string may be issued:

[V6000A0M100V100p4t50,1R]

Breakdown:

V6000A0	Dispense full stroke at plunger velocity of 6000 increments/sec and return home.
M100	Delay 100 ms. Helps prevent a false trigger due to a pressure spike when plunger changes direction from aspirating to dispensing.
V100	Set velocity to 100 increments/sec.
p4	Set pressure sensor gain to maximum.
t50,1	Aspirate while moving plunger toward fluid. If pressure threshold of 50 is exceeded, the plunger will stop moving and the command will complete.
R	Run the string.

To monitor pLLD operation, poll the pump with the [Q] command. If an LLD error code is returned, the plunger has reached the end of the stroke without exceeding the pressure threshold. If [Q] returns Idle, the pressure threshold was exceeded. The pressure threshold output, I/O 1, will also be asserted if it is configured as an output. The pressure threshold output (I/O 1) can then be de-asserted by issuing the [r] command.

To determine the correct pressure threshold <n1>, stream the pressure data from the RS232, RS485, or CAN port. Stream ports are configured using the [U2], [U3], or [U4] command. Use the [f] command to enable streaming only for the data of interest. For example, with the stream port set to RS485 [U3], issue the following command via the RS232 port:

[V6000A3143f1V200t50f0R]

The real-time pressure data will stream out the RS485 port during the pLLD, t50 operation only.

I/O 1 (P4 connector pin 5) can optionally be configured as an output that will trigger an external device if pLLD is successfully completed. If configured as an LLD output, it will automatically be de-asserted once a new [t] command is issued.

I/O 1 can be configured as either a high or low output. Refer to "Configuring auxiliary connections" (page 66).

pLLD operating recommendations

It is recommended to operate the LLD pressure transducer at the gain settings described in "Set pressure transducer gain (p<n>)" (page 76).

The [t] command will aspirate or dispense using the last commanded top velocity [V]. The velocity should be chosen carefully. A high velocity will create a faster pressure rise and response time when the tip reaches a surface, but also can possibly leave the fluid meniscus at the tip in an unknown state (for example, if the tip has submerged into a fluid and left a bubble on the tip or possibly the bubble has broken free and floated to the liquid surface). Usually a slower [V] works well (produces an adequate pressure rise and response time) and also will leave the fluid meniscus in a repeatable condition without blowing bubbles. It is recommended to start with [V] values in the 50-100 increment/sec range (range varies according to N mode).

Capacitive liquid level detect, cLLD (^<n>)

Note:

- This command requires a conductive tip.
- The fluid must have significant ionic strength for cLLD to work.
- The fluid should be sitting on a ground plane shared with the pump for best results with fluids of very low dielectric strength or when moving very small fluid volumes.

Arguments:

<n>	0...15000	Capacitance change threshold

Once the [^] command is issued, the initial capacitance is measured (C_{start}). The capacitance is then measured continually (C_{run}). The command will have successfully completed and the pump status will drop to idle if:

(C_{run} - C_{start}) > <n>

I/O 1 (connector P4 pin 5) can be configured as an optional output that will trigger an external device if cLLD is successfully completed. If configured as an LLD output, I/O 1 will automatically be de-asserted once the [^] command is issued. It can also be reset (de-asserted) using the [r] command.

I/O 1 can be configured as either a high or low output. Refer to "Auxiliary pin functions" (page 66).

To determine a good value for threshold <n>, use streaming data or polling to characterize a system. Then choose a value large enough but not too large to provide the desired detection sensitivity. Also see "Using TCS Pump Commander to assist with liquid level detection" (page 71).

Recalibrate capacitive measurement ambient value (!30)

The [!30] command recalibrates the capacitive measurement ambient value to 760 counts.

When using the [!30] command, observe the following:

- The pump should not have a tip attached.
- The tip adapter should not be in contact with anything.

If a calibration fails, the pump will return an LLD error code in response to the next status query (e.g., a [Q] command).

This command can be used to maintain an ambient capacitive measurement value of 760 counts if desired. When a pump is installed into an OEM system, the electrical environment may differ from the factory environment and the baseline capacitive measurement may not be 760 counts.

Note: The pump also checks at power-up whether a recalibration is needed.

Hybrid liquid level detect, hLLD (B<n1>,<n2>)

The [B] command initiates the hybrid mode, which uses a sequence of capacitive and pressure LLD for detection.

Arguments:

<n1>	0...15000	Capacitance threshold
<n2>	0...1023	Pressure threshold

The capacitance method is used first, followed by the pressure method.

Once the [B] command is issued, the initial capacitance is measured (C_{start}). The capacitance is then continually measured (C_{run}), and once the capacitance threshold is exceeded ((C_{run} - C_{start}) > <n1>)), the plunger moves in the dispense direction until the pressure threshold is exceeded (($P_{dispense}$ - P_{start}) > <n1>). Once the pressure threshold is exceeded, the command is successfully completed and the pump status returns to idle.

If the pump finishes the dispense movement before the pressure threshold is exceeded, an LLD error code will be issued in response to the [Q] command.

If the capacitive threshold is never exceeded, the pump will remain in busy status. The host must monitor and utilize appropriate logic to ensure the [^] command is terminated after an appropriate timeout period or end of Z axis travel.

I/O 1 (connector P4 pin 5) can be configured as an optional output that will trigger an external device if hLLD is successfully completed. If configured as an LLD output, I/O 1 will automatically be de-asserted (reset) once the [B] command is issued. It can also be reset using the [r] command. Refer to "Auxiliary pin functions" (page 66).

I/O 1 can be configured as either an active high or active low output.

Set pressure transducer gain (p<n>)

The [p] command determines the LLD circuit gain (the gain values are approximate).

Arguments:

<n>	0	Low gain (p0), where p0 is output of pressure transducer
<n>	1	Medium-low gain (~2 x p0)
<n>	2	Medium gain (~5 x p0)
<n>	3	Medium-high gain (~10 x p0)
<n>	4	High gain (~20 x p0)
	(0)	Default argument
	{4}	Power-up default

For any fluid operation choose the gain that gives good resolution without saturating the measurement for the commanded pump displacement and velocity. Faster, longer moves will require lower gain and shorter, slower moves will require higher gain.

For pLLD using the [t] command, the highest gain setting [p4] is recommended for small and slow movements. Use lower gain settings when monitoring pressures of large and fast movements (creating larger pressure changes). The fluid engineer must determine the correct gain setting for a particular application.

Table 5-5 shows the approximate absolute measurement range of the pressure sensor for the available [p<n>] values.

Table 5-5: [p<n>] values vs pressure sensor measurement

Counts	[p4]	[p3]	[p2]	[p1]	[p0]
Pascal (approximate absolute pressure measurement range)					
0	100095	98865	96405	89025	76725
410	101325	101325	101325	101325	101325
1023	103164	105003	108681	119715	138105
Pa/count	3.00	5.99	11.99	29.97	59.94
PSI (approximate absolute pressure measurement range)					
0	14.5176	14.3392	13.9824	12.912	11.128
410	14.696	14.696	14.696	14.696	14.696
1023	14.9627	15.2294	15.7629	17.3632	20.0305
PSI/count	0.00043	0.00087	0.00174	0.00435	0.00869

Recalibrate pressure sensor circuitry (a)

The [a] command recalibrates the pressure sensor circuitry to correct for circuit board warming during pump operation. The pressure sensor circuitry is calibrated at power-up, but warming during operation will cause elevated readings due to operational amplifier temperature drift. This most notably affects the higher gain settings of the [p] command ([p3 and [p4]). Issuing the [a] command will recalibrate the pressure sensor circuitry to produce 410 counts at atmospheric pressure.

The [a] command should be used before any command sequence that utilizes or produces a pressure measurement (the [q] command, for example).

Both at power-up and when using the [a] command, the pump tip must be exposed to atmospheric pressure in order to properly calibrate the circuitry.

Anti-drip command (d)

The [d] command uses the pump pressure sensor to prevent drips while transporting highly volatile fluids.

After an aspiration event and the tip is moved out of the fluid, it is a combination of surface tension forces and the small vacuum pressure above the fluid that keeps the fluid from falling out.

Highly volatile fluids that evaporate quickly can decrease the pressure above the fluid, allowing it to drip from the tip. The [d] command records the pressure and then monitors and maintains the pressure by aspirating the syringe plunger until a termination command [T] is issued. It is recommended that the most sensitive pressure gain setting ([p4]) be used with the [d] command. If the pump runs out of available stroke while maintaining the vacuum above the fluid, a plunger overload error will be issued.

Example:

[ap4dR] move [TR]

Breakdown

a	Calibrate pressure count
p4	Set pressure gain to highest setting
d	Start anti-drip pressure monitoring
R	Run
<Move pipette to new location >	
[TR]	Stop anti-drip pressure monitoring

Reset LLD output (r)

The [r] command resets, or de-asserts, the LLD output (I/O 1, connector P4 pin 5). Note that this output is automatically reset whenever a [t], [B], or [^] command is issued. I/O 1 must be configured as an LLD output for this command to have an effect. See "Auxiliary pin functions" (page 66).

Pressure data streaming

Pressure sensor data can be streamed out of the RS232, RS485 or CAN port. This allows for real-time external monitoring of the pressure data, which can be used for the following:

- Determining the correct pressure threshold for pLLD when designing or running fluid operations
- Verifying aspirate/dispense volumes during normal dispense and aspirate operations
- Detecting a defective or blocked tip, or a failure to install a tip
- The CAN bus allows fast streaming because of its high bandwidth. Streaming pressure measurements are sent approximately every 2 ms.

Streaming from the CAN port provides these advantages:

- The CAN bus allows faster streaming because of its much higher bandwidth. Streaming pressure measurements are sent approximately every 2 ms.
- When using CAN, multiple pumps can be streamed at once. The RS232 and RS485 protocols allow only one pump at a time to be data streamed. Using higher bit rates with CAN increases the number of pumps that can be streamed simultaneously.
- The CAN port is able to simultaneously stream data and respond to commands. The serial ports (RS232 and RS485) cannot accept commands when configured for streaming.

Pressure data has a maximum value of 1023 counts and a minimum of 0 counts.[1] Atmospheric pressure is about 410 counts for all pressure sensor gain settings. Refer also to "Set pressure transducer gain (p<n>)" (page 76).

[U1], [U2], [U3], and [U4] configure the streaming port. See "Set pump configuration (U<n>)" (page 97). The [f] command enables or disables pressure data streaming. The [p] command determines the pressure measurement circuit gain. For pLLD, the highest gain setting [p4] is recommended for small and slow movements. Use lower gain settings when monitoring pressures of large and fast movements (creating larger pressure changes). The fluid engineer must determine the correct gain setting for a particular application.

Note: Pressure data streaming can be viewed using the TCS Pump Commander Pressure Monitor window. See TCS Pump Commander integrated help.

1. The pressure data may not achieve a full 10-bit count (1023) due to the voltage output capability of the pressure measurement circuitry.

Pressure data format

When using the RS232 or RS485 port to receive streamed pressure data, the data format is always DT. If the pressure data is streamed over CAN, the data is sent in binary format.

RS232/485 pressure data format

The pressure data over RS232 and RS485, which is in DT format, is shown in Table 5-6.

Table 5-6: Pressure data in DT format

Character Number	Character Description	Value
1	Start answer	ASCII "/" or 2Fh
2	Master address	ASCII "0" or 30h
3	Status character	ASCII "`" or 60h
3+n	Pressure data	ASCII "0....1023" 0 = negative pressure 410 = atmospheric pressure 1023 = maximum pressure
4+n	ETX, end of message	03h
5+n	Carriage return	0Dh
6+n	Line feed	0Ah

CAN pressure data format

When using the CAN port, the data, assuming the device has been assigned a Slave ID with group 2 and device number 0, is in binary format as follows:

Dir	Group	Device	Frame Type	RTR/IDE/r0	DLC	Data bytes
1	010	0000	101	000	1000	Eight data bytes

Where the data bits are organized in the following bit format by nibble, starting with data byte 0:

TTRR RRRR RRRR RRRR PPPP PPPP PPPP PPPP tttt tttt tttt tttt tttt tttt tttt tttt

Each bit field is defined as follows:

TT = b00	R bits contain capacitive detect measurement
TT = b01	R bits contain latest averaged pressure measurement
TT = b10	R bits contain pLLD start pressure measurement
TT = b11	Reserved

RR RRRR RRRR RRRR	The R bits can represent pressure or capacitive measurement values from 0 through 16,384, unsigned.

PPPP PPPP PPPP PPPP	The P bits always contain the current plunger position in increments (or micro-increments, as determined by the [N] command setting). The field is unsigned and can contain values 0 through 65,535.
tttt tttt tttt tttt tttt tttt tttt tttt	The time stamp, which indicates when the data packet was assembled, expressed in ticks since power-up or reset, where one tick is 100 microseconds. The t bits are unsigned and represent an integer number 0 through 4,294,967,295.

If using CAN for streaming only, the pump will stream from a Group ID set to 2 and a Device ID set from the pump's address DIP switches. If the pump has been assigned a Slave ID, it will stream from this assigned value.

Pressure data streaming commands

- The [U] command and SW 1 switch 8 configure data streaming for the correct port.
- The [f] command in a command string enables or disables pressure data streaming.
- The [+] command alters the continuation period following a move, overriding the default setting of [u22].
- The [p] command determines the pressure transducer output gain.

The [p] command is described on page 76. The other commands listed above are described below.

Configure pressure data streaming

Streaming is configured as follows:

- DIP switch 8 of SW1 must be in the OFF position for pressure data streaming to be allowed. See "Auxiliary pin functions" (page 66).
- The commands [U1], [U2], [U3], and [U4] configure the streaming port:
  - [U1] = no streaming
  - [U2] = RS232 port streaming
  - [U3] = RS485 port streaming
  - [U4] = CAN port streaming (default)

  All [U] commands are also listed in Table 5-7 (page 97).

Enable or disable pressure data streaming (f<n>)

The [f] command provides run-time control of pressure data streaming.

Arguments:

<n>	0	Disable pressure data streaming
<n>	1	Enable pressure data streaming
<n>	2	Stream pressure data continuously
<n>	3	Stream capacitive data continuously
<n>	4	Stream pressure and capacitive data continuously. Pressure and capacitive values alternate.
	(0)	default argument

For example, in the following string,

[V6000A3143f1V200t50f0R]

data will only stream during the [t] aspirate move.

To receive pressure streaming data, pressure streaming must also be configured as described above.

Continue streaming (+<n>)

The [+] command works in conjunction with the [f] stream data command. When using the [f] command, it is usually necessary to continue streaming data after a move is complete in order to record a complete pressure profile of the operation. In other words, most of the time the pressure within the pump has not yet reached equilibrium when the plunger has completed its motion. The [+] command allows the user to dynamically change the time that streaming will continue after a movement resulting from an [A], [P], or [D] command has completed.

Argument:

<n>	0...5000	time, in milliseconds, to continue streaming after a move

The [+] command overrides the [u22] command for the next [A], [P], or [D] command only. If the [+] command is not used, the [u22] command sets the global default streaming continuation period.

Example of the [+] command used in a command string (See Figure 5-2):

[f1+300A1250f0R]

In this example, the [+] command sets a continuation period of 300 ms. The [A] command data will continue to stream for 300 ms after the plunger reaches 1250 increments.

Figure 5-2. Continue streaming period example

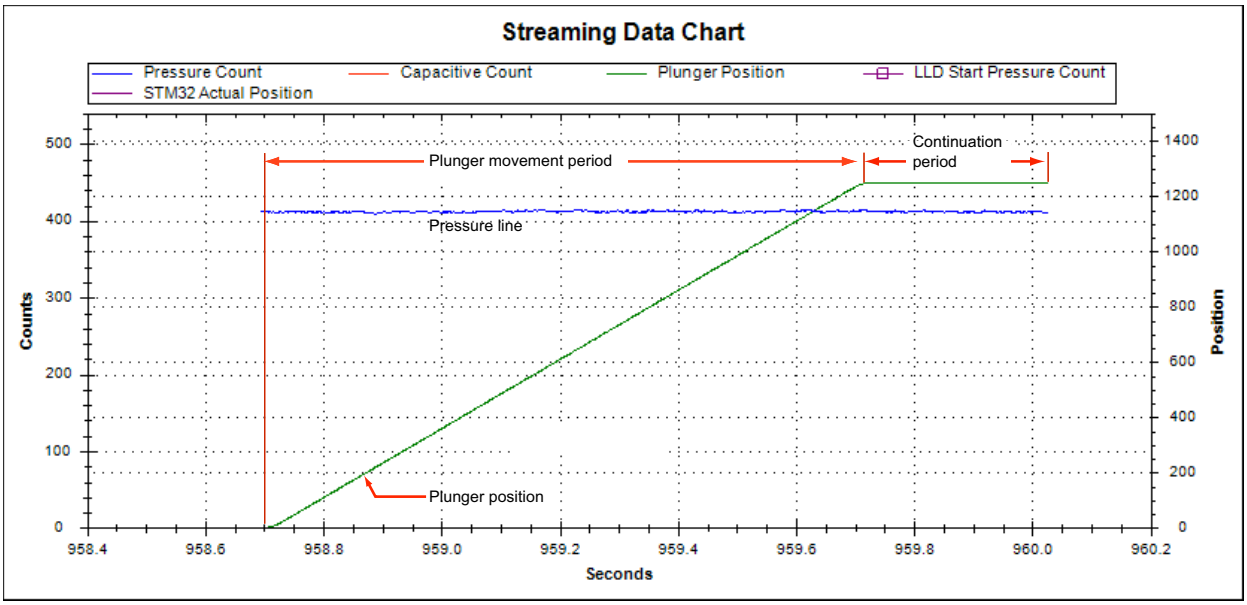

Operation validation (aspirate/dispense verify)

Operation validation monitors aspirate or dispense movements for problems with fluid handling, such as failed aspiration, clogged tips, and wrong fluid volumes moved. Validation can be achieved by externally monitoring and processing real-time pressure streaming data. Alternatively, validation can be achieved automatically using the [q] command as this section describes.

Note: The procedures described here make use of the TCS Pump Commander software Pressure Monitoring Window.

The operation validation command (q)

The [q] command uses the pump pressure sensor to qualify (or validate) the aspirate or dispense command that immediately follows the [q] command. It monitors fluid operation and detects tip clogs and aspiration of air or bubbles. In addition, it verifies that the expected amount of fluid was handled. If qualification is successful, no error codes will be generated. If unsuccessful, an error code indicating the cause of failure will be returned in response to a [Q] command status query. Tolerance for the [q] command can be set on the fly by the [%] command.

The [q] command has two forms, distinguished by the number of arguments used with the command.

- If two arguments are provided, the *time intersect* validation method is being used. (This method has been deprecated; it is not recommended.)
- If only one argument is provided, the *pressure integration* validation method is being used. Both methods are described below.

The arguments for [q] must be pre-determined by running the fluid operation that is to be qualified. The operation is run while streaming the pressure data to a connected Windows® computer. The resulting pressure profile is analyzed as described below.

Note: The TCS Pump Commander has built-in tools to facilitate the determination of the [q] command arguments, <n1> and <n2>. Operating instructions for the TCS Pump Commander may be found in the integrated help documentation.

Qualify next motion, time intersect method (q<n1>,<n2>)

Note: The time intersect method is deprecated. The pressure integration method is easier to use and more robust. See "Qualify next motion, pressure integration method (q<n>)" (page 87).

The time intersect version of the [q] command has two arguments.

Arguments:

<n1>	0...6000	Characteristic operation time in milliseconds
<n2>	0...1023	Pressure threshold in counts that will identify a clogged tip

Prerequisites:

Prior to using the [q] command, all of the following must be completed:

- The correct <n1> and <n2> arguments must be derived as described on page 85.
- The pressure sensor gain setting ([p] command), plunger velocities, and plunger positions must be set to the same values used when deriving the [q] command <n1> and <n2> arguments. It is recommended that the [a] command be used prior to executing an operation that is using [p2] or higher gain settings.
- The error tolerance must be correctly programmed using the [u21] command. See Table 5-8 (page 100). The current status of this setting can be queried with [?77].

  [u21] Error tolerance setting for the [q] command volume validation algorithm. The default is 5%. Alternatively, the [%] command may be issued immediately prior to the [q] command. See"Error tolerance setting for [q] command (%<n>)" (page 91).

Options:

The following [u] command selections may be made (page 101):

[u32]	Enable or disable clogged tip check. Enabled by default.
[u33]	Enable or disable operation volume check. Enabled by default.
[u34]	Enable or disable air in fluid check. Enabled by default.
[u35]	Enable or disable bubbles/foam in fluid check. Enabled by default.

See "Deriving <n1> and <n2> arguments for the time intersect method" on next page.

Deriving <n1> and <n2> arguments for the time intersect method

Note: The following instructions refer to screens in the TCS Pump Commander Pressure Monitor Window area.

The Time intersect screen (Figure 5-3) charts possible changes in pressure during an aspiration move. Figure 5-4 shows example pressure traces under various conditions.

Figure 5-3. Time intersect screen

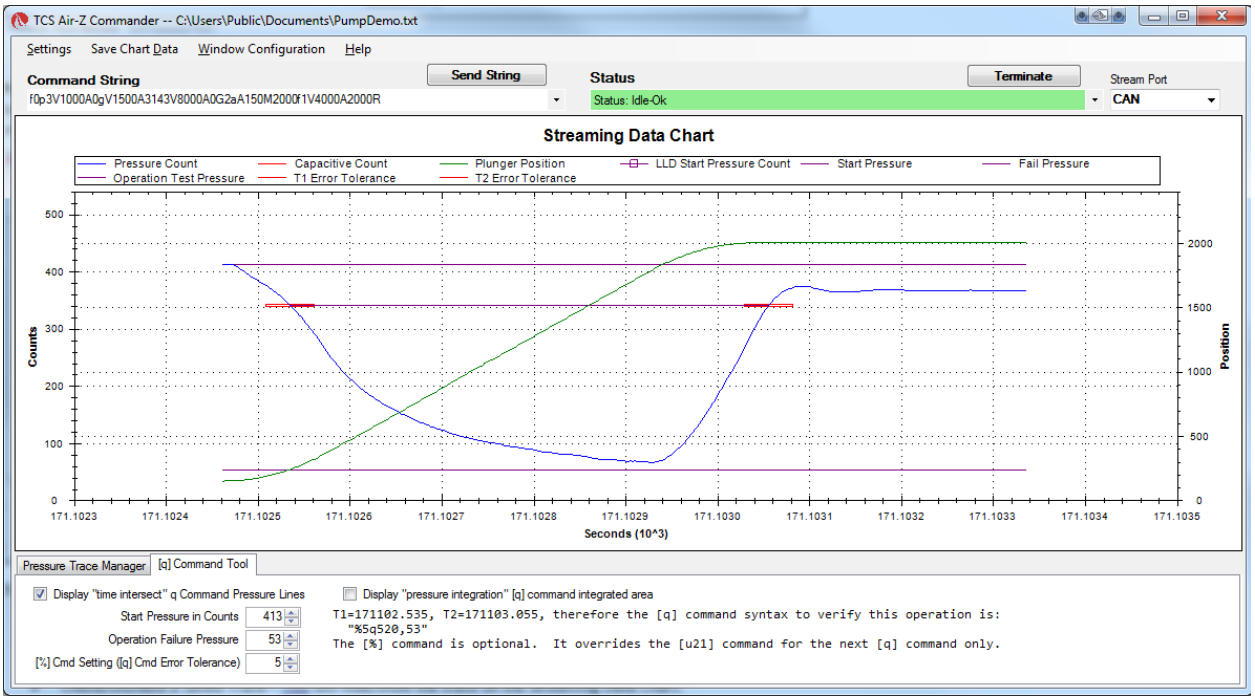

In Figure 5-4 (page 86), the [q] command argument <n2> corresponds to the P_{Fail} line, and the <n1> argument corresponds to the time difference between the points marked T_1 and T_2. T_1 and T_2 are the times at which the measured pressure crosses the $P_{20\%}$ line. The $P_{20\%}$ line is located below P_{Start} (atmospheric pressure) via the formula $P_{20\%} = P_{Start} - (P_{Start} - P_{Fail}) * 0.2$.

The pressure levels calculated by the [q] command allow detection of aspiration/dispense failures due to a clogged tip or insufficient fluid. The delta between T1 and T2 (the <n1> argument) allows verification of the fluid volume handled during the operation. If <n1> is greater than (T2 -T1) * [u21], the pressure profile is out of tolerance, indicating that the fluid volume aspirated or dispensed must be in error. Note that the [q] command <n1> argument is only valid for the operation velocities set prior to executing the fluid operation.

Additionally, the [q] command will monitor the pressure aspiration/dispense curve and look for sudden, small changes in pressure which indicate the presence of bubbles in the working fluid.

Figure 5-4. Example traces using time intersect

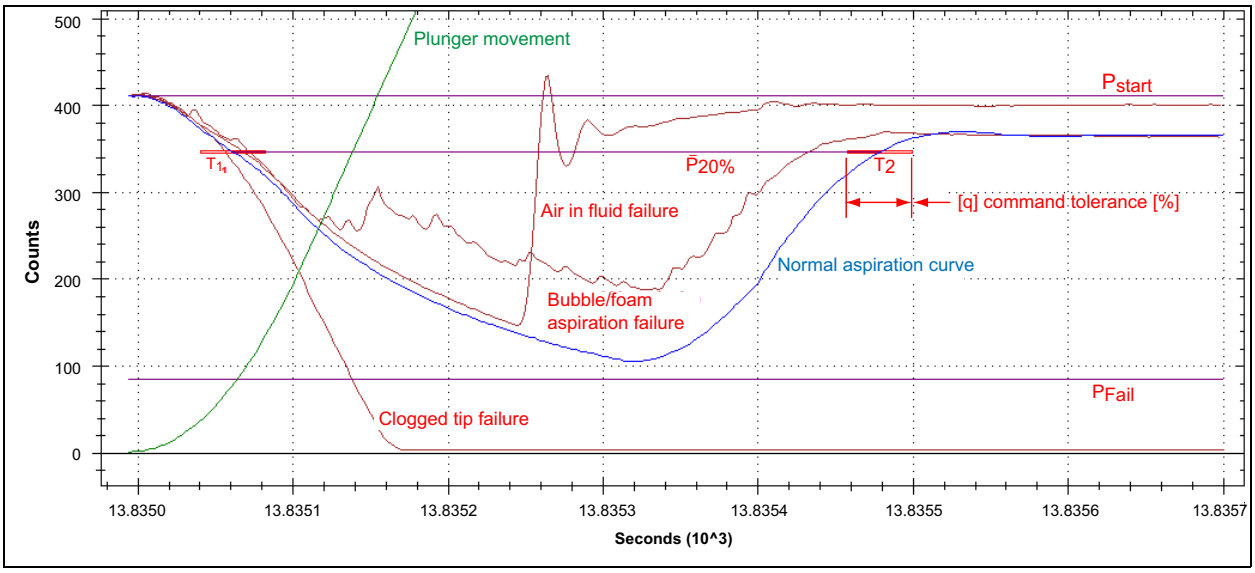

Consistency of results can be checked with the Pressure Trace Manager in TCS Pump Commander (see below). Several identical operations can be run as the results are displayed. For [q] to work well, the pressure trace must be the same each time the same operation is run.

Figure 5-5. Pressure Trace Manager screen

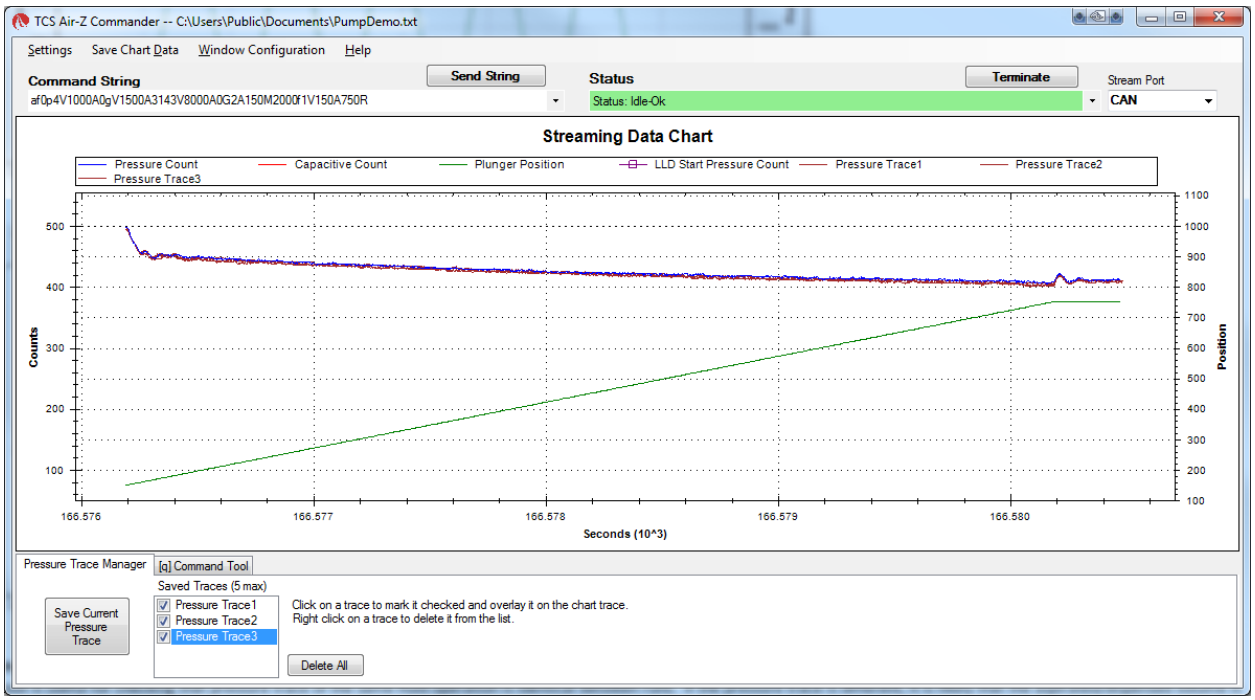

Error codes generated by time intersect method

The time intersect [q] command can generate four possible error codes, as shown below. The codes are reported in response to the [Q] command. Table 5-11 (page 112) has a complete listing of error codes.

Error generated by [q<n1>,<n2>] command	Error description
P or p	Clogged (blocked) tip
Q or q	Aspiration/dispense of air
R or r	Aspiration/dispense of foam or bubbles
S or s	Inaccurate aspiration/dispense; volume error

Qualify next motion, pressure integration method (q<n>)

Note: The following instructions refer to windows in the TCS Pump Commander user interface.

This version of the [q] command has only one argument instead of two. If qualification is successful, no error codes will be generated.

Argument:

<n> 0...6000 characteristic pressure curve integration area in count-seconds

Prerequisites:

Prior to using the [q <n>] command, all of the following must be completed:

- The correct <n> argument must be derived as described on page 88.
- The pressure sensor gain setting ([p] command), plunger velocities, and plunger positions must be set to the same values used when deriving the [q] command <n> argument. It is recommended that the [a] command be used prior to executing an operation that is using [p2] or higher gain settings.
- The [u21] command below must be correctly programmed. The current status of this setting can be queried with [?77]:

  [u21] Error tolerance setting for the [q] command volume verification algorithm. The default is 5%. Alternatively, the [%] command may be issued immediately prior to the [q] command. See "Error tolerance setting for [q] command (%<n>)" (page 91).

Options:

The following [u] command selections may be made, as shown on page 101:

[u32] Enable or disable clogged tip check. Enabled by default.
[u33] Enable or disable operation volume check. Enabled by default.
[u34] Enable or disable air in fluid check. Enabled by default.
[u35] Enable or disable bubbles/foam in fluid check. Enabled by default.

Deriving <n> argument for the pressure integration method

The [q] command argument <n> is the expected pressure area, expressed in count-seconds, found by integrating the area between the pressure at the start of an operation (atmospheric pressure) and pressure curve created by the operation. In Figure 5-6, this area is shown for an aspiration operation.

Figure 5-6. Aspiration validation using pressure integration

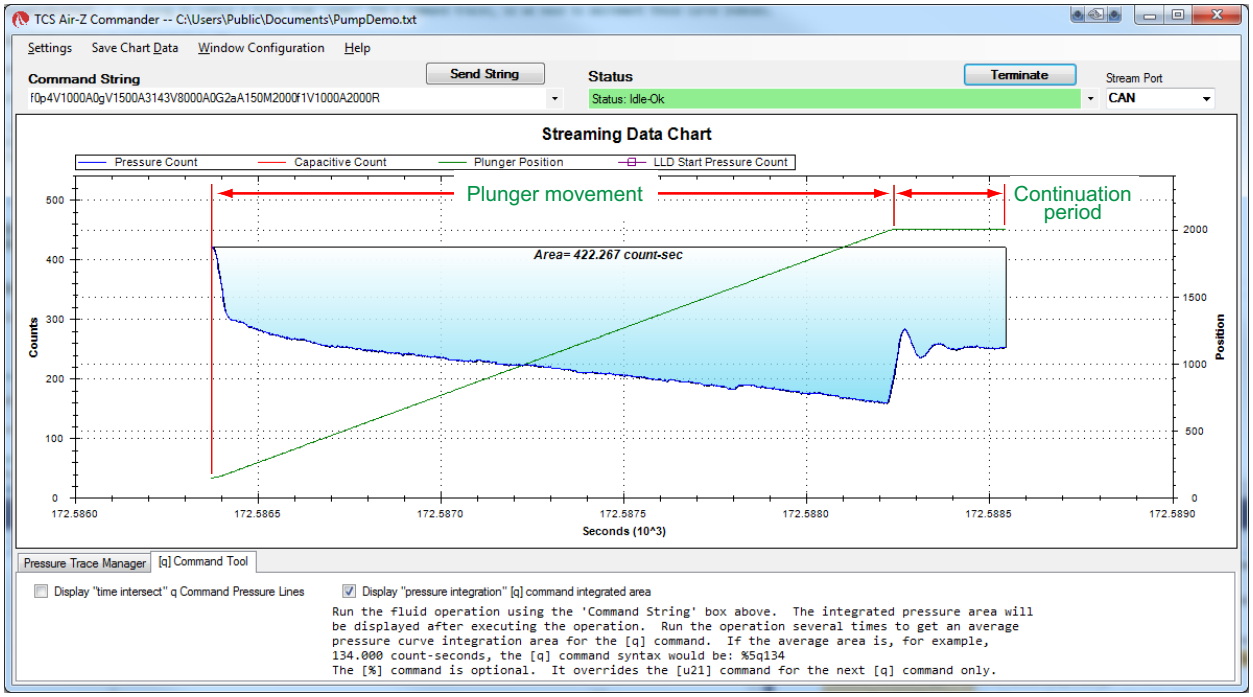

TCS Pump Commander can be used to show the resulting area for an operation. The area may also be reported using the [?156] and [?157] commands (see below).

Pressure area integration period

The integration period is affected by the streaming command [f]:

- If data streaming is off [f0], the integration period spans only the time of the plunger movement.
- If data streaming is on [f1], it also includes the continuation period that follows the plunger movement. The continuation period allows it to capture any important pressure events that occur after the plunger stops moving. The default continuation period is set by [u22], and can be overridden by the [+] command for one plunger move. In Figure 5-6, the continuation period is 300 ms. Although data may stream during the continuation period, the host isn't required to capture it.

The integration period can be reported directly using the [?156] and [?157] queries. These can be used by the host to perform its own pressure area operation verification checks in place of the [q] command if desired.

- The [?156] query reports the pressure area for the last plunger move, whether or not data streaming is on. When data streaming is on, this includes the continuation period described above.
- The [?157] query reports the pressure area only for the last streaming move.

Consistency of results can be checked with the Pressure Trace Manager in TCS Pump Commander (see below). Several identical operations can be run as the results are displayed. For [q] to work well, the pressure trace must be the same each time the same operation is run.

Figure 5-7. Pressure Trace Manager screen

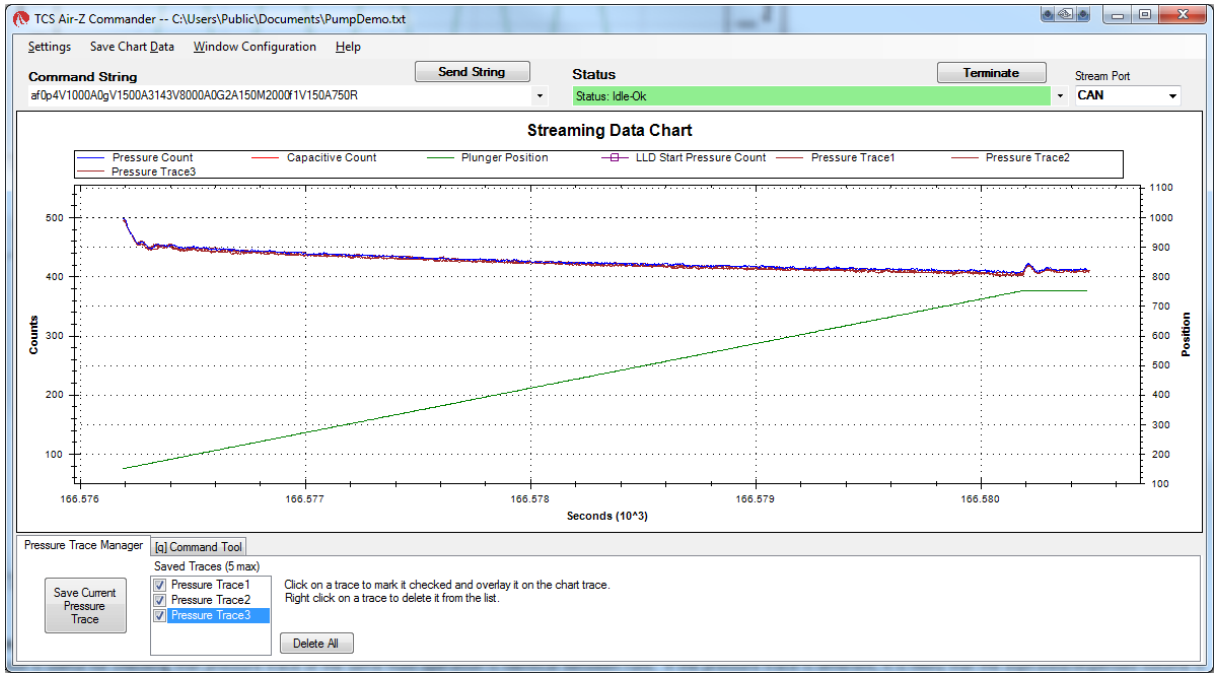

Error codes generated by pressure integration method

As with the time-intersect version of the [q] command, the pressure integration version can produce the same four possible error codes. The codes are described below in relationship to the pressure integration method, and are reported in response to the [Q] command. Table 5-11 (page 112) has a complete listing of the error codes.

Error generated by [q<n>] command	Error description
P or p	Clogged (blocked) tip, where the pressure curve area is larger than the expected area plus the allowed tolerance
Q or q	Aspiration/dispense of air, where the pressure curve area is smaller than the expected area minus twice the allowed tolerance
R or r	Aspiration/dispense of foam or bubbles, which is detected when there are several rapid changes of slope in the pressure curve
S or s	Inaccurate aspiration/dispense (volume error), where the pressure curve area is outside the error tolerance allowed by the [%] or [u21] commands but not a clogged tip or air-in-fluid error

Example command strings with [q] verification

The plunger is at position 0. [A1250] will move the plunger up 1250 increments, aspirating 437.5 µL of water. Command strings to perform this move with validation using the [q] command for the time intersect and pressure integration methods are shown here:

Time intersect example:

[ap2q337,100V4000A1250R]

Breakdown:

a	Recalibrate pressure measurement circuitry.
p2	Set pressure measurement gain to 2.
q337,100	Set qualify operation time to 337 milliseconds, and pressure threshold to 100 counts.
V4000	Set top velocity to 4000 increments/sec.
A1250	Move plunger to absolute position 1250 increments.
R	Run the command string.

Pressure integration example:

[ap2f1q49V4000A1250f0R]

Breakdown:

a	Recalibrate pressure measurement circuitry.
p2	Set pressure measurement gain to 2.
f1	Enable pressure data streaming.
q49	Set qualify operation to 49 count-seconds.
V4000	Set top velocity to 4000 increments/sec.
A1250	Move plunger to absolute position 1250 increments.
f0	Disable pressure data streaming.
R	Run the command string.

Simplifying use of [q] command by using [e] command

Frequently-used aspiration/dispense operations can be stored in EEPROM using the [s] command and executed using the [e] command.

Example:

The command string in the pressure integration example above, [ap2f1q49V4000A1250f0R], can be stored in EEPROM location 8 by adding s8 to the front of the string:

[s8ap2f1q49V4000A1250f0R]

and later executed at any time by issuing the command [e8R].

Error tolerance setting for [q] command (%<n>)

The [%] command specifies the error tolerance to be used with the [q] command. The error tolerance is specified by EEPROM command [u21] by default, but can be dynamically changed using the [%] command. The [%] command overrides the [u21] value only for the immediately following [q] command.

Argument:

<n> = 1...20	Error tolerance applied to the [q] command in percent

Example:

[%5q322,290]

This specifies a 5% tolerance [%5] for the immediately following [q] command [q322,290].

If tolerance is set to less than 5%, it must be validated.

Temperature compensation

For pumps installed in environments where the ambient temperature varies, compensation can be used to achieve improved aspiration and dispense volume accuracy.

Additionally, a program developed at one ambient temperature may later be run in an environment with a different ambient temperature. With air displacement pumps, this can affect moved volume accuracy. (This illustrates the importance of letting precision fluid-handling systems reach a stable temperature, and maintaining a steady ambient temperature, for best results.)

There are two modes of temperature compensation: *automatic* and *on-the-fly.* Automatic compensation uses a fixed ambient temperature as described below. On-the-fly compensation uses a temperature value that is provided by the host controller to compensate for a changing temperature environment.

Automatic temperature compensation

The following software settings control automatic temperature compensation:

- [u24] enables temperature compensation. Set to 1 to enable compensation. The default setting is 0 (compensation off).
- [u25] sets the temperature compensation rate, which is expressed in increments/°C/mL. The default setting is 12.
- [u26] is the ambient temperature setting, expressed as °C * 100. The default setting is 2400 (24°C). (During on-the-fly temperature compensation, this value is supplied by the user each time a move command is issued.)

When enabled, temperature compensation compares the built-in pump body temperature measurement with the ambient temperature, as provided by the [u26] setting. If a temperature difference exists, the pump calculates the number of increments to be added to or subtracted from movement commands according to the temperature compensation rate set by [u25].

If the default compensation settings of [u25] and/or [u26] are inadequate, they can be changed as described in "Set pump/system EEPROM configuration parameters (u<n_x>)" (page 99). Also note that the [*] command (page 93) can be used to help determine an optimum value for [u25].

On-the-fly temperature compensation (*<n1>,<n2>)

The [*] command adjusts the distance the plunger moves on the next aspiration or dispense command to compensate for the temperature difference between the pump body and the ambient environment.

The temperature of the pump body is provided by the built-in temperature sensor of the Air-Z Premier. The ambient temperature is provided by the user each time the command is sent.

This command is especially useful when the ambient temperature is constantly changing or an executing program causes regular changes in the pump body temperature.

The [*] command affects the next [A], [P], or [D] command only.

Arguments:

<n1>	1500...4000	Current ambient temperature (°C) *100
<n2>	0...50	Compensation rate in increments/°C/mL

Note: Both arguments are required each time the command is issued.

Example (1000 µL):

If the current pump body temperature is 26 °C, and the ambient temperature is 24°C, the command [*2400,12P1000] will adjust the distance the plunger moves in response to the P1000 command as follows:

Volume aspirated =	1000 increments * 0.382 µL/increment = 382 µL= 0.382 mL (0.382 µL/increment is set by the [u16] command)
Compensation increments =	12 increments/°C/mL * (26.00-24.00 °C) * 0.382 mL = 8.9 increments

Notes:

- The [*] command overrides the automatic temperature compensation on/off setting [u24].
- The [*] command overrides the ambient temperature value of [u25].
- Changing the [u25] temperature compensation value requires a reset ([Z], [!0], or power cycle), while the [*] command changes temperature compensation on the fly. This makes the [*] command useful for experimentally determining the correct value for [u25].
- Compensation requiring movement greater than the maximum available stroke will result in an invalid operand error.

Using EEPROM

EEPROM (Electrically Erasable Programmable Read-Only Memory) is used to store the following information:[1]

- Up to 16 separate command strings. These strings can be executed under control of the host computer using the [e] command (page 95), or in standalone (AutoRun) mode (page 104).
- Integer user data, up to sixteen 8-bit values.
- Pump configuration data that determines how the pump functions and communicates.

Store and execute command strings

Store command string in EEPROM (s<n>)

The [s] command stores a command string in one of 16 EEPROM locations (numbered 0 through 15). Up to 16 command strings can be stored. Each string can use up to 80 characters.

Arguments:

<n>	0...15	EEPROM location 0 through 15
	(0)	default argument
<command string>	Command string. Note that there is no comma used between the <n> and <command string> arguments. See example below.	

The [s] command is placed at the beginning of a command string the user wants to store in EEPROM.

Example:

To aspirate and dispense a complete pump volume, the following string can be stored at location 0 in the pump: [s0V6000A3143V500A0R].

To read back a stored string, use report commands [?80] through [?95] as shown in Table 5-10 (page 105).

1. The Air-Z Premier also contains FeRAM (Ferroelectric Random Access Memory), another type of non-volatile memory. FeRAM can be written and erased many more times than EEPROM, and is used to store values that change frequently.
   For example, pump usage data is stored in FeRAM, such as: the number of pump power-ups, the number of pump initializations ([Z] or [W] commands), the number of tip ejects, the total operating time, the total number of plunger moves, and the total plunger distance moved.

Execute command string stored in EEPROM (e<n>)

The [e] command executes the string stored in EEPROM location <n>.

Argument:

<n>	0...15	EEPROM location 0 through 15
	(0)	Default argument

Example:

[e0R] will run the string stored in EEPROM location 0.

Linking command strings stored in EEPROM

Command strings stored in EEPROM can be linked by ending one command string with an [e] command that refers to a second command string.

Example command strings:

[s1ZHgA3000A0G5e2R]

[s2gHA3000gHD300G10GR]

- The first [s] command string stores an initialization sequence into program location 1 of the EEPROM. It then links to string 2 in EEPROM using the embedded command [e2].
- The second [s] command string stores an aspirate and dispense sequence into program location 2 of the EEPROM. This second command string first aspirates fluid, then performs 10 dispenses of 300 increments each.

  Due to the [H] command in this string, the fluid dispenses are triggered by the proper auxiliary input, or an [R] command.

  This sequence is repeated endlessly until the pump is powered down, due to the last [G] command.

Note: When linking command strings, a jumped-to string will not return to the calling string. In the example above, [s1] jumps to [e2]. Once [e2] has executed, control will not return to the calling sting [s1]. Thus, [e] commands are normally placed at the end of a string just before the [R].

Executing long command strings using the [e] command

Break up commands

If a command string exceeds 128 characters, it can be broken down into parts stored in separate locations. The [e] command can then be used to run the different parts in the appropriate sequence.

For example, if the first part of a string resides in location 3 (s3) and the second part in location 4 (s4), the command [e4] would be placed at the end of s3. This would run the second part of the string (s4) after the first part was finished.

Virtually embed commands

Another way to limit the length of command strings sent to the pump is to use the [e] command to effectively embed commands in strings. For example, If the command [V2000] is used frequently, it could be stored in EEPROM location 0 by issuing [s0V2000]. Afterwards, this command could

be called up and executed using [e0], as in the command string [e0A0R]. This would first execute [V2000], then the remaining command in the string.

Store and retrieve user data to/from EEPROM

Store user data in EEPROM (> <n1>,<n2>)

The [>] command (greater-than symbol “>”) allows the user to store an 8-bit value (0-255) in up to 16 locations.

Note: This function is provided for industry compatibility.

Arguments:

<n1>	0...15	EEPROM location
<n2>	0...255	Data

Example:

[>0,220] stores the number 220 at location 0.

Retrieve user data from EEPROM (< <n>)

The [<] command (less-than symbol "<") allows the user to retrieve an 8-bit value stored in up to 16 locations.

Note: This function is provided for industry compatibility.

Argument:

<n>	0...15	EEPROM location

Example:

Assuming [>0,220] was previously issued, [<0] will return “220.”

Set system parameters

Set pump configuration (U<n>)

The [U] command saves pump configuration settings to EEPROM.

This command does not require an [R] to execute. The pump configuration settings can be reported by using the [?76] and [?77] report commands.

Argument:

<n> See Table 5-7 below. (Factory default values are indicated in the table.)

Example:

Command [U2] sets stream port to RS232 and control port to RS485.

Note: These parameters do not take effect until power is cycled, or the [!0] (pump reset) command is executed.

Table 5-7: Pump configuration set with U<n>

U and <n> value	Description	Notes (end of table)
U1	No stream port. Both RS232 and RS485 are used for pump control. RS232 automatically converts strings to RS485 for daisy-chaining multiple pumps from a single RS232 port.	1
U2	Stream port - RS232 Control port - RS485	1
U3	Stream port - RS485 Control port - RS232	1
U4 (default)	Stream port - CAN Control port - RS485 or RS232 or CAN	1, 2
U35 (default)	Auto detect communication protocol.	1, 2
U36	OEM communication protocol only	1
U37	DT communication protocol only	1
U41	Set RS232/RS485 baud rate to 9600.	1
U47 (default)	Set RS232/RS485 baud rate to 38400.	1, 2
U51	Set CAN communication rate to 100K.	1
U52	Set CAN communication rate to 125K.	1
U53	Set CAN communication rate to 250K.	1
U54 (default)	Set CAN communication rate to 500K.	1, 2
U55	Set CAN communication rate to 1M.	1
U70 (default)	Set I/O 1 to LLD output active high.	2
U71	Set I/O 1 to LLD output active low.	
U73	Set I/O 1 to general-purpose output, which is set high or low by [J] command.	
U74 (default)	Set I/O 2 to general purpose input used by [H] command. Weak pull-up. 1 ms debounce time	2
U75	Set I/O 2 to emergency brake input (external terminate). Same electrical characteristics as for general purpose input.	
U76	Set I/O 2 to tip loss high output.	

Table 5-7: Pump configuration set with U<n> (continued)

U and <n> value	Description	Notes (end of table)
U77	Set I/O 2 to tip loss low output.	
U78	Set CAN Status Response to 0x20 format	
U79	Set CAN Status Response to 0x60 format (default)	
U80	Turn ON Over Pressure error	
U81	Turn OFF Over Pressure error	

1. This setting is ignored if SW 1 switch 8 is in ON position.
2. Defaults shown are active when SW 1 switch 8 is in OFF position.

Set pump/system EEPROM configuration parameters (u<n_x>)

The [u] command stores pump configuration and calibration information in EEPROM. It is similar to the [U] command, may change some of the same parameters as the [U] command, but also allows calibration of other pump parameters.

This command does not require an [R] to execute. The [u] command EEPROM settings can be reported using the [?27] command.

Argument:

<n>	1...35_x	where 1...35 is the parameter, and _x is the setting. See example below and Table 5-8. (Factory default values are indicated in Table 5-8.)

Example:

The command [u2_0] would set the RS232/RS485 baud rate to 9600. The command [u2_1] would set the baud rate to 38400.

Note: These parameters do not take effect until power is cycled or the [!0] (pump reset) command is executed. Some take effect after a [Z] command.

Table 5-8: Pump configuration set with u<n_x>

u<n> value	Description, range of _x value	Factory default (x/x =1000 µL/ 500 µL)	Notes (end of table)
u1_x	Maximum stroke (tip size in increments) 1...3143	3143	2
u2_x	RS232/RS485 baud rate 0 = 9600 1 = 38400	1	1
u3_x	RS232/RS485 communication protocol 0 = auto detect 1 = DT only 2 = OEM only	0	1
u4_x	LLD stream port 0 = none 1 = RS232 2 = RS485 3 = CAN	3	1
u5_x	CAN bus enable 0 = disabled 1 = enabled	1	1
u6_x	CAN bus communication rate 0 =100K 1 = 125K 2 = 250K 3 = 500K 4 = 1M	4	1
u7_x	Backlash increments 0...32 Always set to zero for air displacement pipette type of pump such as the Air-Z series.	0	2
u8_x	Pressure measurement moving average window size 0 = 1 measurement 1 = 2 measurements 2 = 4 measurements 3 = 8 measurements 4 = 16 measurements 5 = 32 measurements	3	2
u9_x	I/O 1 function 0 = LLD out high 1 = LLD out low 2 = General-purpose output	0	
u10_x	I/O 2 function 0 =General-purpose input 1 = Emergency Brake 2 = Tip loss high 3 = Tip loss low	0	3
u11_x	Encoder increment-loss threshold 0...255 0 = encoder disabled	6	
u12_x	Opto to home offset (aspirating) 0...300	250	

Table 5-8: Pump configuration set with u<n_x> (continued)

u<n> value	Description, range of _x value	Factory default (x/x =1000 µL/ 500 µL)	Notes (end of table)
u13_x	Motor holding current in % (for factory use only) 1...100	10	2
u14_x	Motor running current in % (for factory use only) 1...100	68	2
u15_x	pLLD start pressure delay in milliseconds 0...2000	100	2
u16_x	µL/increment*1000 conversion ratio. This value is used to convert µL inputs and outputs to increments when using [N2] (u38_0) mode. See Table 5-1 (page 54). E.g., u16_362 = 0.362 µL/increment 250...400	360/180	2
u17_x	Maximum stroke size in µL. Setting this value will cause u1 to equal u17/u16. Setting u1 will cause u17 to equal u1*u16. 0...1169/550.025	1169/550.025	2
u18_x	Selects and loads from EEPROM the active [u39] and [u40] values for m and b variables 0...3 See [u39] and [u40].		
u21_x	[q] command default error tolerance 1...20	5	2
u22_x	Time in milliseconds to continue streaming pressure data after a plunger movement has completed. See the [+] command, which temporarily overrides the [u22] setting. 0...5000	300	2
u23_x	Factory use only	N/A	
u24_x	Automatically use temperature compensation. 0 = OFF 1 = ON0	0	2
u25_x	Temperature compensation rate in increments per °C per mL 0...50 **Note:** The [*] command overrides this setting.	12/6	2
u26_x	Ambient temperature*100 (e.g., 24 °C*100=2400) to use with temperature compensation **Note:** The [*] command overrides this setting. 0...4000	2400	2
u32_x	“Clogged tip” check function of [q] command 0=disabled 1 = enabled	1	2
u33_x	“Operation volume” check function of [q] command 0=disabled 1 = enabled	1	2
u34_x	“Air in fluid” check function of [q] command 0=disabled 1 = enabled	1	2
u35_x	“Bubbles/foam in fluid” check function of [q] command 0=disabled 1 = enabled	1	2
u36_x	Over-pressure error 0=disabled 1 = enabled	0	2

Table 5-8: Pump configuration set with u<n_x> (continued)

u<n> value	Description, range of _x value	Factory default (x/x =1000 µL/ 500 µL)	Notes (end of table)
u37_x	Set maximum allowed top velocity 3000...8000	8000	2
u38_x	Set the [N2] mode to linear or non-linear conversion of microliters to increments. 0= Linear conversion mode. Uses conversion ratio set by [u16]. 1 = Non-linear conversion mode. Uses m and b values stored in [u39], [u40] locations or issued with the [x] command.	0	
u39_x,y	Set the EEPROM m [x] parameter. x= 0...3 One of four default values y= 0.10....0.300 new value for specified x selection Example: [u39_0,1952R] sets the 0 value of x to 1.952. This would be the m value loaded if the u18_0 command were issued.	x values 0=0.955 1=0.940 2=0.958 3=0.956	4
u40_x,y	Set the EEPROM b [x] parameter. x= 0...3 One of four default values y= -10.000....10.000 new value for specified x selection This command works in the same fashion as the [u39] command, setting the b value loaded when the [u18] command is issued.	x values 0=6.629 1=1.952 2=0.591 3=2.866	4
u41_x	Set response delay in milliseconds. 0...2000	0	

1. This setting is ignored if SW1 switch 8 is in the ON position.
2. This setting will take effect the next time a [Z] is issued, the Reset command [!0] is issued, or the pump is power-cycled.
3. Emergency brake setting is an active-high external command termination input that acts like the Terminate [T] command for the [A], [P], [D], [t], and [B] commands.
4. The default [u39] and [u40] “x” values 0...3 contain “y” value test results for the following conditions:

   x = 0 air dispense forward pipetting with a 1 mL tip and distilled water

   x = 1 air dispense forward pipetting with a 200 µL tip and distilled water

   x = 2 air dispense reverse pipetting with a 1 mL tip and distilled water

   x = 3 air dispense reverse pipetting with a 200 µL tip and distilled water

Reset pump parameters to default (!22)

The [!22] command resets parameters as follows:

- All user data stored with [>] command is set to 0 (zero).
- Pump configuration EEPROM parameters are set to factory defaults.

⚠CAUTION

CAUTION: The [!22] command is for factory use only.

Reset pump (!0)

The [!0] command resets the pump microprocessor. The firmware restarts at the first instruction. This command simulates a power cycle to allow [U] and [u] commands (pump configuration EEPROM parameters) to take effect.

Standalone operation (AutoRun)

The Air-Z Premier has the ability to operate in standalone mode without a host computer controlling it. First, string(s) are stored in EEPROM using the [s] command. On power-up, the pump checks if the AutoRun switch is enabled. If so, the address setting now points to a memory location, and the string in that location runs automatically.

Procedure

1. Store command string(s) in memory location(s) using the [s] command. See "Store command string in EEPROM (s<n>)" (page 94).

   If multiple or very long command strings are to be run, see "Executing long command strings using the [e] command" (page 95).

2. Make the following switch settings. Instructions are on page 26:
   a. Set device address (DIP switches) to indicate the EEPROM location of the first command string to be run, as shown in Table 5-9 below. (In AutoRun mode, these switches indicate an EEPROM location rather than a device address.)
   b. Set AutoRun switch (switch 7) to OFF position.
3. Power cycle the pump. The command string in the EEPROM location that the address setting points to will be run. If there are additional commands to be run, they will be run in the order programmed by the [e] command at the end of string(s).

Table 5-9: Pump device (address) setting vs. string executed

Pump device setting	String executed from EEPROM (stored with [s<n>])
1	s0 (string stored in EEPROM location 0, and so forth)
2	s1
3	s2
4	s3
5	s4
6	s5
7	s6
8	s7
9	s8
10	s9
11	s10
12	s11
13	s12
14	s13
15	s14
16	s15

Report (query) commands

Report commands request various pump parameters. The response is returned immediately and can be used when the pump is busy executing command strings. The only exception is the [?50] query, which must be issued when the pump is idle.

Report commands do not require termination with an [R] command.

Note: Multiple-device addresses cannot be used to query device status or to issue report commands. Each device must be queried separately. Were it not so, all the addressed devices would attempt to respond at once.

Table 5-10: Report commands

Report command	Report description
[Q]	Pump status (busy or idle) or error code if applicable. Same as [?29].
[&]	Firmware version. Format is "AZPVVVV: Vxx, YYYY-MM-DD" where: Vxx = firmware version (xx = version) VVVV = pump volume in µL YYYY = year MM = month DD = day Same as [?23].
[=]	Current [or last] command string in buffer. Will either report while command is executing or after execution is complete. Same as [?99].
[?0] or [?1] or [?]	Plunger position in increments, micro-increments, or µL depending on [N] increment mode setting; same as [?16].
[?2]	Plunger position in millimeters
[?3]	Plunger position in µL
[?4]	Backlash increments [K] in increments, micro-increments, or µL depending on [N] increment mode setting. Always zero for the Air-Z pumps.
[?5]	Encoder position (quadrature counts)
[?6]	Start velocity [v] in increments/sec, micro-increments/sec, or µL/sec depending on [N] increment mode setting
[?7]	Top velocity [V] in increments/sec, micro-increments/sec, or µL/sec depending on [N] increment mode setting
[?8]	Cutoff velocity [c] in increments/sec, micro-increments/sec, or µL/sec depending on [N] increment mode setting
[?9]	Ramp-up acceleration slope code ([L] <n1> argument)
[?10]	Ramp-down deceleration slope code ([L] <n2> argument)
[?11]	Pump motor run current [m] in % of maximum (0-100)
[?12]	Pump motor holding current [h] in % of maximum (0-100)
[?16]	Plunger position in increments, micro-increments, or µL depending on [N] increment mode setting; same as [?0] and [?1]
[?17]	Maximum stroke length in increments, micro-increments, or µL depending on [N] increment mode setting
[?18]	Start velocity [v] in increments/sec, micro-increments/sec, or µL/sec depending on [N] increment mode setting; same as [?6].
[?19]	Top velocity [V] in increments/sec, micro-increments/sec, or µL/sec depending on [N] increment mode setting; same as [?7].

Table 5-10: Report commands (continued)

Report command	Report description
[?20]	Cutoff velocity [c] in increments/sec, micro-increments/sec, or µL/sec depending on [N] increment mode setting; same as [?8].
[?23]	Firmware version; same as [&].
[?27]	EEPROM configuration parameters set with [u] command, comma delimited
[?28]	Current [u39] and [u40] EEPROM values. Report lists the coefficients in the order m0,b0,m1,b1,m2,b2,m3,b3
[?29]	Pump status (busy or idle); same as [Q]
[?30]	I/O 2 input state 0 = low 1 = high
[?31]	Tip sensor status 0 = No tip detected 1 = Tip detected
[?38]	Pressure moving average window size. This is the current setting of [u8].
[?40]	Total operating time in minutes
[?41]	Number of pump power-ups
[?42]	Number of pump initializations
[?43]	Number of pump initializations since power-up
[?44]	Distance of plunger movements in meters
[?45]	Number of plunger moves
[?46]	Number of plunger moves since power-up
[?47]	Number of tip ejects
[?48]	Number of tip ejects since power-up
[?50]	24V power supply voltage. Must be issued when pump status is idle.
[?51]	Maximum recorded voltage
[?52]	Min. recorded voltage
[?53]	Temperature sensor reading in °C
[?54]	Highest recorded temperature value
[?55]	Lowest recorded temperature value
[?56]	Pressure ADC count moving average reading 0 = min pressure 410 = atmospheric pressure (approximately) 1023= max. pressure
[?58]	Highest recorded pressure value since the last [f1] command
[?59]	Lowest recorded pressure value since the last [f1] command
[?63]	Firmware version. Same as [?23] and [&].
[?65]	Firmware checksum value and status. If the calculated value does not match the expected value, the command reports "0xXXXX, Error." If the firmware checksum value is correct, the command report format is "0xXXXX, OK", where XXXX is the calculated 16-bit checksum.
[?67]	Command buffer status 0 = buffer empty 1 = command string in buffer

Table 5-10: Report commands (continued)

Report command	Report description
[?68]	Capacitive reading in counts Capacitance = approximately 0.5pF/count
[?69]	Highest recorded capacitance value, in counts, since the last [f1] command. See [?68]. Capacitance = approximately 0.5pF/count.
[?70]	Lowest recorded capacitance value, in counts, since the last [f1] command. See [?68]. Capacitance = approximately 0.5pF/count.
[?76]	Communication EEPROM configuration in ASCII text, delimited by "|" • RS232/RS485 baud rate, 9600 or 38400 • CAN communication rate 100K, 125K, 250K, 500K or 1M • Communication protocol, AUTO, DT, or OEM • Stream port, RS232, RS485 or CAN Example: 9600|500K|AUTO|SP CAN Baud rate = 9600 CAN rate = 500K COM protocol = Auto detect OEM/DT Stream port = CAN **Note:** These parameters are stored in EEPROM. At power-up, they will be overridden if the communication configuration switch (DIP switch number 8) is in the ON position.

Table 5-10: Report commands (continued)

Report command	Report description
[?77]	Pump EEPROM configuration in ASCII text, delimited by "|" • Stroke in µL (microliters) ST_UL • Stroke in increments ST_INC • I/O 2 configuration, GPI,EBRAKE,TIP_H,TIP_L • I/O 1 configuration, LLD_H,LLD_L,GPO • Communication configuration switch setting, DIP switch SW1 position 8 • Stream port, PSOFF,PS232,PS485,PSCAN • Backlash increments, BL_STEPS • ADC count pressure moving window size, PRES_AVG • Encoder increment loss threshold, ENC_THRES • Pressure LLD start pressure measurement delay, PRES_START_DELAY • µL*1000 to increment ratio, UL_INCR_RATIO • [q] command error tolerance, QCMD_ERR_TOL • Pressure streaming continuation period in milliseconds, PRES_STREAM_CONT_PER Example: ST_UL 1169|ST_STEP 3143|GPI|LLD_H|COM_SWITCH ON|PSCAN|BL_-STEPS 0|PRES_AVG 3|ENC_THRES 6|PRES_START_DELAY 100|UL_IN-CR_RATIO 382|QCMD_ERR_TOL 5|PRES_STREAM_CONT_PER 300|UNIT_SIZE 0|RESP_DELAY 0 • Stroke in µL = 1169 • Stroke in increments = 3143 • I/O 2 =General-purpose input • I/O 1 = LLD output high • COM switch is in ON position (9600 baud, Auto detect protocol) • Stream port = CAN • Backlash increments = 0 • Pressure averaging window size: 0=1, 1=2, 2=4, 3=8, 4=16, 5=32 • Increment loss encoder threshold = 6 • Pressure LLD start pressure measurement delay = 100 • µL*1000/increment ratio = 382 • [q] command error tolerance = 5% • Pressure streaming continuation period in milliseconds = 300 • Factory set unit size = 0 • Serial bus response delay = 0
[?80]	[s0] string. Command string stored in EEPROM location 0
[?81]	[s1] string. Command string stored in EEPROM location 1
[?82]	[s2] string. Command string stored in EEPROM location 2
[?83]	[s3] string. Command string stored in EEPROM location 3
[?84]	[s4] string. Command string stored in EEPROM location 4
[?85]	[s5] string. Command string stored in EEPROM location 5
[?86]	[s6] string. Command string stored in EEPROM location 6
[?87]	[s7] string. Command string stored in EEPROM location 7
[?88]	[s8] string. Command string stored in EEPROM location 8
[?89]	[s9] string. Command string stored in EEPROM location 9
[?90]	[s10] string. Command string stored in EEPROM location 10
[?91]	[s11] string. Command string stored in EEPROM location 11
[?92]	[s12] string. Command string stored in EEPROM location 12

Table 5-10: Report commands (continued)

Report command	Report description
[?93]	[s13] string. Command string stored in EEPROM location 13
[?94]	[s14] string. Command string stored in EEPROM location 14
[?95]	[s15] string. Command string stored in EEPROM location 15
[?99]	Current [or last] command string in buffer; same as [=].
[?100]	Current [p] (pressure transducer gain) command setting
[?102]	Current [N] increment mode setting 0 = increment mode 1 = micro-increment mode 2 = µL mode
[?103]	I/O 1 state
[?149]	Total temperature compensation increments moved since last time plunger was at the home (zero) position
[?156]	Integrated pressure area of the last plunger move in count-seconds. If streaming is on, this includes continuation period. Example response: 104.877.
[?157]	Integrated pressure area of the last streamed plunger move in count-seconds. Example response: 112.5527.
[?159]	Current [f] command state
[?160]	Reports the start cLLD count from last [^] command. The mathematical difference [?161] - [?160] will be >= to the [^] command value.
[?161]	Reports the finish cLLD count from last [^] command. The mathematical difference [?161] - [?160] will be >= to the [^] command value.
[?162]	Currently loaded [N2] [u38_1] m value that is in memory.
[?163]	Currently loaded [N2] [u38_1] b value that is in memory.

Status and error codes

The [Q] command reports error codes and pump status (idle or busy). The user should send a [Q] command before sending a command string or individual command to ensure that the pump has completed the previous command successfully.

The response to the [Q] command is the status byte. This byte provides two items of information: pump status (bit 5) and error code (bits 0-4).

⚠CAUTION

CAUTION: All errors reported by the pump should be captured by the user's software and the physical cause corrected before continuing operation. Failure to do so may result in damage to the pump or adversely affect pump performance, and void the warranty.

Pump status bit

Bit 5 is the status bit. It indicates whether the pump is busy or not busy. The designations for bit 5 are listed below.

Bit 5 values:

1 Pump is idle. It is ready to accept new commands.

0 Pump is busy and will only accept report, terminate [T], or top velocity [V] commands.

In response to uppercase move commands ([A], [P] and [D]), the [Q] command reports that the pump is busy. Additionally, commands addressed to multiple pumps at once cannot be used to obtain pump status; each pump must be queried separately.

Error codes (bits 0-4)

Error codes describe problem conditions that may be detected when operating the Air-Z Premier. The error codes are listed in Table 5-11 (page 112).

- Error codes are returned in the least significant five bits of the status byte (0-4). If an error occurs, the pump stops executing commands, clears the command buffer, and inserts the error code into the status byte.
- Some errors, such as plunger overloads, continue to appear until they are cleared by an initialization command. On a plunger overload, the device will not execute another plunger move command until it is reinitialized.
- The most recent error has precedence in the status byte. For example, if a command overflow occurs, and the next command causes an invalid operand error, the status byte reflects the invalid operand error.

Error types

The pump handles errors differently depending on the error type. There are four error types, described below and listed in Table 5-11 (page 112).

Immediate errors

These include:

- Invalid command
- Invalid operand
- Invalid checksum

Immediate errors are returned directly after the offending command is received by the pump. A subsequent [Q] command will not report the error.

Note: There is no need to reinitialize the pump following this type of error.

Initialization errors

These include:

- Initialization failure
- Device not Initialized

To ensure that the pump initialized successfully, send a [Q] command after each initialization [Z] or [W] command.

- If an error occurs during initialization, an Initialization failure error will be returned in response to the [Q] command. The pump must be reinitialized until the [Q] command indicates successful initialization.
- If the response indicates both a successful initialization and that the pump is ready, subsequent move commands can be sent.
- If initialization is not successful, or if any plunger move command is sent prior to an initialization command, a device not initialized error is returned in response to the command.

Overload errors

These include:

- Plunger overload
- Over pressure

If the pump returns a plunger overload error, the pump must be reinitialized before continuing. If another plunger move is sent without reinitializing the pump, the plunger overload error will be repeated.

Command overflow error

This error occurs when certain commands are sent to the pump while it is busy executing another command string. The pump ignores the new command and issues a command overflow error.

Any move or setting (except [V]) that is sent while the pump is busy will cause this error to be issued. Report, top velocity [V], and terminate [T] commands will not return a command overflow error. These commands are considered valid even when the pump is busy. The [Q] command is used to determine when the command is complete and the pump is ready to accept new commands.

There is no need to reinitialize the pump following this type of error.

Table 5-11: Error codes, status byte with ASCII and hexadecimal values

Status byte	Hex if status bit 5[1] =		ASCII if status bit 5 =		Error code description[2]	
7 6 5 4 3 2 1 0	X= 0 (busy)	X=1 (idle)	X= 0 (busy)	X=1 (idle)	Number	Error type
0 1 X 0 0 0 0 0	40h	60h	@	`	0	No error
0 1 X 0 0 0 0 1	41h	61h	A	a	1	Initialization failure
0 1 X 0 0 0 1 0	42h	62h	B	b	2	Invalid command
0 1 X 0 0 0 1 1	43h	63h	C	c	3	Invalid operand
0 1 X 0 0 1 0 0	44h	64h	D	d	4	Pressure sensor fault
0 1 X 0 0 1 0 1	45h	65h	E	e	5	Over pressure (transducer saturated high or low)
0 1 X 0 0 1 1 0	46h	66h	F	f	6	LLD error
0 1 X 0 0 1 1 1	47h	67h	G	g	7	Device not initialized
0 1 X 0 1 0 0 0	48h	68h	H	h	8	Tip eject error
0 1 X 0 1 0 0 1	49h	69h	I	i	9	Plunger overload
0 1 X 0 1 0 1 0	4Ah	6Ah	J	j	10	Tip loss
0 1 X 0 1 0 1 1	4Bh	6Bh	K	k	11	CAN bus failure
0 1 X 0 1 1 0 0	4Ch	6Ch	L	l	12	Invalid checksum (OEM mode)
0 1 X 0 1 1 0 1	4Dh	6Dh	M	m	13	EEPROM fault
0 1 X 0 1 1 1 0	4Eh	6Eh	N	n	14	Not implemented
0 1 X 0 1 1 1 1	4Fh	6Fh	O	o	15	Command overflow
0 1 X 1 0 0 0 0	50h	70h	P	p	16	Clogged tip
0 1 X 1 0 0 0 1	51h	71h	Q	q	17	Air in fluid
0 1 X 1 0 0 1 0	52h	72h	R	r	18	Bubbles/foam in fluid
0 1 X 1 0 0 1 1	53h	73h	S	s	19	Operation volume error

1. Bit 5, the status bit, indicates when the pump is busy or not busy. The two possible states of bit 5 are described below.

   X = 1 Pump is idle. It is ready to accept new commands
   X = 0 Pump is busy and will only accept report ([?]), terminate ([T]), or top velocity ([V]) commands. Any other command issued will result in a command overflow error and will not be executed.

2. For remedial action, see "Error codes and corrective action" (page 129).

Error reporting examples

Note: Examples are in N0 increment mode.

[A7000R] Since <7000> is greater than the stroke of the Air-Z Premier, this returns an error immediately in the command response. When queried with the [Q] command, an error code is not returned.

[A100R] If issued immediately after power-up, a device not initialized error results when queried with [Q]. After power-up, pump must be initialized before move commands can be accepted.

Command summaries

The following tables contain summaries of the commands for RS232/RS485 and CAN Bus communications as a convenient reference.

Note: In the following tables,

- "Default operand" is the one supplied if command is issued without providing an operand.
- If no power-up default is shown, there is none.
- "N/A" means there is no operand for this command. Adding one will result in an invalid argument error.
- "None" means there is no default operand, and one must be supplied or an invalid command error will result.

RS232/RS485 command summary

Table 5-12: Air-Z Premier RS232/RS485 command summary

Command	Operand <n> range	Default Operand	Power-up default	Command description	Operand/other description
Execution control commands					
[R]	N/A			Execute command string.	
[X]	N/A			Re-execute last executed command string.	Not valid for loops.
[G<n>]	0...50000	0		Repeat command sequence (loop).	Number of loops to repeat 0 = Loop indefinitely
[g]	N/A			Mark the start of a repeat sequence (loop).	
[M<n>]	0...30000	100		Delay command execution.	Milliseconds
[H]	N/A			Halt command execution and wait for [R] command or low on I/O 2 if configured as general-purpose input.	
[T]	N/A			Terminate command.	
[C]	N/A			Clear command buffer; clear currently-loaded command string.	
Initialization commands					
[Z] or [W]	N/A			Initialize pump.	
[z<n>]	0...3143 N0 0...50288 N1 0...1200.626/600.313 N2	0		Simulate initialization. Set pump's internal position counter to value specified.	Maximum argument may be lower if setting of [u1] has been changed by user.

Table 5-12: Air-Z Premier RS232/RS485 command summary (continued)

Command	Operand <n> range	Default Operand	Power-up default	Command description	Operand/other description
Plunger move commands					
[A<n>]	0...3143 N0 0...50288 N1 0...1200.626/ 600.313 N2	0		Move plunger to absolute position. Maximum argument may be lower if setting of [u1] has been changed by user.	
[P<n>]		0		Relative pickup (aspirate)	
[D<n>]		0		Relative dispense	
Set commands					
[K<n>]	0...32 N0 0...256 N1 0...12.224/6.112 N2	none	0	Set backlash increments.	Always set to zero for this product.
[L<n1>, <n2>]	<n1> 1...20 <n2> 1...20	none	14, 14	Set acceleration/deceleration slope.	Slope code. <n1> = acceleration slope <n2> = deceleration slope
[v<n>]	0...1000 N0 0...16000 N1 0...382.000/ 191.000 N2	none	0	Set start velocity.	
[V<n>]	0...8000 N0 0...128000 N1 0...3056.000/ 1528.000 N2	none	1400	Set top velocity.	
[S<n>]	0...40	none	11	Set a defined speed.	Speed code
[c<n>]	0...1950 N0 0...31200 N1 0...744.900/ 372.450 N2	none	900	Set cutoff velocity.	
[N<n>]	0...2	none	0	Set resolution/increment mode for positioning and velocity.	0 = Normal increment mode 1 = Micro-increment mode 2 = µL mode. Commands are expressed in µL
[x<n1>, <n2>]	<n1> 0.01...3.000 <n2> -10.000...10.000	none		Sets values of m and b variables directly in N2 non-linear mode.	
[J<n>]	0 or 1	0		Sets I/O 1 high or low when I/O 1 is configured as a general-purpose output. Output is configured by [U] command.	0 = Set I/O 1 low 1 = Set I/O 1 high
[h<n>]	0...100	none	10	Set motor hold current in % of maximum.	For factory use only.
[m<n>]	0...100	none	50	Set motor run current in % of maximum.	For factory use only.

Table 5-12: Air-Z Premier RS232/RS485 command summary (continued)

Command	Operand <n> range	Default Operand	Power-up default	Command description	Operand/other description
EEPROM commands					
[s<n>]	0...15	0		Store command string in specified EEPROM location.	EEPROM location
[e<n>]	0...15	0		Execute command string from specified EEPROM location.	EEPROM location
[U<n>]		none		Set pump configuration in EEPROM.	See Table 5-7 (page 97).
[u<n_x>]		none		Set pump configuration parameters in EEPROM.	See Table 5-8 (page 100).
[!22]	N/A			Resets pump parameters to default (EEPROM settings and stored user data).	
[!0]	N/A			Reset pump. Simulates power cycle to allow [U] and [u] commands to take effect.	
[**>** <n1, n2>]	<n1> 0...15 <n2> 0...255	none		Store user data in specified EEPROM location.	<n1> EEPROM location <n2> User data, 8-bit byte
[**<** <n>]	0...15	none		Retrieve user data from specified EEPROM location.	<n> EEPROM location
Disposable tip commands					
[E<n>]	0 or 1	0		Eject tip. This command cancels an active [Y] command.	0 = Use tip sensor to check for successful tip ejection and tip presence before ejection. 1 = Do not use tip sensor to check for successful ejection/presence.
[Y]	N/A			Check for unexpected tip loss.	
[y]	N/A			Reset tip sensor output on I/O 2 if configured as tip loss output with [U]. This command cancels an active [Y] command.	
Liquid level detect (LLD) commands					
[t<n1>, <n2>]	<n1> 0...1023 <n2> 0 or 1	none 0		Pressure liquid level detect, pLLD	<n1> pressure threshold <n2> 0 = dispense; 1 = aspirate
[^<n>]	0...15000	none		Capacitive liquid level detect, cLLD	Capacitance change threshold
[B<n1>, <n2>]	<n1> 0...15000 <n2> 0...1023	none		Hybrid liquid level detect, hLLD	<n1> capacitance threshold <n2> pressure threshold
[p<n>]	0...4	0	4	Set pressure transducer gain.	Gain setting
[a]	N/A			Recalibrate pressure sensor circuitry.	
[d]	N/A			Anti-drip command	
[r]	N/A			Reset LLD output.	
[!30]	N/A			Recalibrate capacitive ambient value	

Table 5-12: Air-Z Premier RS232/RS485 command summary (continued)

Command	Operand <n> range	Default Operand	Power-up default	Command description	Operand/other description
Data streaming commands					
[f<n>]	0...4	0		Enable or disable pressure data streaming	0 = disable pressure data streaming 1 = enable pressure data streaming 2 = stream pressure data continuously 3 = stream capacitive data continuously 4 = stream pressure and capacitive data continuously. Pressure and capacitive values alternate.
[+<n>]	0...5000	none		Time to continue streaming after a move	Milliseconds
Operation validation commands					
[q<n1>, <n2>]	<n1> 0...6000 <n2>0...1023	none		Uses the time intersect method to validate the immediately following aspirate or dispense command.	<n1> characteristic operation time in milliseconds <n2> pressure threshold in counts that will identify a clogged tip
[q<n>]	<n1> 0...6000	none		Uses the pressure integration method to validate the immediately following aspirate or dispense command.	<n1> characteristic pressure integration area in count-seconds
[%<n>]	1...20	none	5	Sets error tolerance for [q] command.	Error tolerance for [q] command in percent. For both versions of [q] command.
Temperature compensation commands					
[*<n1>, <n2>]	<n1> 1500...4000 <n2>0...50	none	2400,12	On-the-fly temperature compensation. Overrides automatic temperature compensation and temperature configuration setting.	<n1> current ambient temperature (°C) *100 <n2> compensation rate in increments/°C/mL Both arguments required.
Report commands					
[Q]	N/A			Reports pump status (busy or idle). Same as [?29]	
[&]	N/A			Reports firmware version.	
[=]	N/A			Reports current [or last] command string in buffer, either while command is executing or after execution is complete. Same as [?99].	
[?0] or [?1] or [?]	N/A			Reports plunger position in increments, micro-increments, or µL depending on [N] mode. Same as [?16].	
[?2]	N/A			Reports plunger position in millimeters.	
[?3]	N/A			Reports plunger position in µL.	

Table 5-12: Air-Z Premier RS232/RS485 command summary (continued)

Command	Operand <n> range	Default Operand	Power-up default	Command description	Operand/other description
[?4]	N/A			Reports backlash set by [K] command in increments, micro-increments, or µL depending on N increment mode setting.	
[?5]	N/A			Reports encoder position (quadrature counts).	
[?6]	N/A			Reports start velocity [v] in increments/sec, micro-increments/sec, or µL/sec depending on [N] increment mode setting. Same as [?18].	
[?7]	N/A			Reports top velocity [V] in increments/sec, micro-increments/sec, or µL/sec depending on [N] increment mode setting.	
[?8]	N/A			Reports cutoff velocity [c] in increments/sec, micro-increments/sec, or µL/sec depending on [N] increment mode setting.	
[?9]	N/A			Reports acceleration slope code ([L] <n1> argument).	
[?10]	N/A			Reports deceleration slope code ([L] <n2> argument).	
[?11]	N/A			Reports motor run current as % of maximum (0...100).	
[?12]	N/A			Reports motor holding current as % of maximum (0...100).	
[?16]	N/A			Reports plunger position in increments, micro-increments, or µL depending on [N] increment mode setting. Same as [?0] and [?1] and [?].	
[?17]	N/A			Reports maximum. stroke length in increments, micro-increments, or µL depending on [N] increment mode setting.	
[?18]	N/A			Reports start velocity [v] in increments/sec, micro-increments/sec, or µL/sec depending on [N] increment mode setting. Same as [?6].	
[?19]	N/A			Reports top velocity [V] in increments/sec, micro-increments/sec, or µL/sec depending on [N] increment mode setting. Same as [?7].	
[?20]	N/A			Reports cutoff velocity [c]. Same as [?8].	
[?23]	N/A			Reports firmware version. Same as [&].	
[?27]	N/A			Reports EEPROM configuration parameters set with [u] command, comma delimited.	

Table 5-12: Air-Z Premier RS232/RS485 command summary (continued)

Command	Operand <n> range	Default Operand	Power-up default	Command description	Operand/other description
[?28]	N/A			Reports the current [u39] and [u40] EEPROM values. Report lists the coefficients in the order m0,b0,m1,b1,m2,b2,m3,b3	
[?29]	N/A			Reports pump status, busy or idle. Same as [Q].	
[?30]	N/A			Reports I/O 2 input state.	0 = low 1 = high
[?31]	N/A			Reports tip sensor status.	0 = no tip detected 1 = tip detected
[?38]	N/A			Reports pressure moving average window size (setting of [u8]).	
[?40]	N/A			Reports total operating time in minutes.	
[?41]	N/A			Reports number of pump power-ups.	
[?42]	N/A			Reports number of pump initializations.	
[?43]	N/A			Reports number of pump initializations since power-up.	
[?44]	N/A			Reports distance of plunger movements in meters.	
[?45]	N/A			Reports number of plunger moves.	
[?46]	N/A			Reports number of plunger moves since power-up.	
[?47]	N/A			Reports number of tip ejects.	
[?48]	N/A			Reports number of tip ejects since power-up.	
[?50]	N/A			Reports 24V power supply voltage.	
[?51]	N/A			Reports maximum recorded power supply voltage.	
[?52]	N/A			Reports min. recorded power supply voltage.	
[?53]	N/A			Reports temperature sensor reading in °C.	
[?54]	N/A			Reports highest recorded temperature value.	
[?55]	N/A			Reports lowest recorded temperature value.	
[?56]	N/A			Reports pressure ADC count moving average reading.	0 = minimum pressure 410 = atmospheric pressure (approximately) 1023 = maximum pressure
[?58]	N/A			Reports highest recorded pressure value since the last [f1] command.	

Table 5-12: Air-Z Premier RS232/RS485 command summary (continued)

Command	Operand <n> range	Default Operand	Power-up default	Command description	Operand/other description
[?59]	N/A			Reports lowest recorded pressure value since the last [f1] command.	
[?63]	N/A			Reports firmware version. Same as [?23] and [&].	
[?65]	N/A			Reports firmware checksum value and status. The checksum is a 16-bit value in the format "0xXXXX."	If calculated value and expected value do not match, the report is "0xXXXX, Error." If firmware checksum value is correct, the report is "0xXXXX, OK."
[?67]	N/A			Reports command buffer status.	0 = buffer empty 1 = command string in buffer
[?68]	N/A			Reports capacitive reading in counts (approximately 0.5pF/count}.	
[?69]	N/A			Reports highest recorded capacitance value in counts since the last [f1] command. (approximately 0.5pF/count}.	
[?70]	N/A			Reports lowest recorded capacitance value in counts since the last [f1] command. (approximately 0.5pF/count}.	
[?76]	N/A			Reports communication EEPROM configuration in ASCII text format.	
[?77]	N/A			Reports pump EEPROM configuration in ASCII text format.	
[?80]	N/A			Reports command string stored in EEPROM location 0.	
[?81]	N/A			Reports command string stored in EEPROM location 1.	
[?82]	N/A			Reports command string stored in EEPROM location 2.	
[?83]	N/A			Reports command string stored in EEPROM location 3.	
[?84]	N/A			Reports command string stored in EEPROM location 4.	
[?85]	N/A			Reports command string stored in EEPROM location 5.	
[?86]	N/A			Reports command string stored in EEPROM location 6.	
[?87]	N/A			Reports command string stored in EEPROM location 7.	
[?88]	N/A			Reports command string stored in EEPROM location 8.	
[?89]	N/A			Reports command string stored in EEPROM location 9.	
[?90]	N/A			Reports command string stored in EEPROM location 10.	
[?91]	N/A			Reports command string stored in EEPROM location 11.	

Table 5-12: Air-Z Premier RS232/RS485 command summary (continued)

Command	Operand <n> range	Default Operand	Power-up default	Command description	Operand/other description
[?92]	N/A			Reports command string stored in EEPROM location 12.	
[?93]	N/A			Reports command string stored in EEPROM location 13.	
[?94]	N/A			Reports command string stored in EEPROM location 14.	
[?95]	N/A			Reports command string stored in EEPROM location 15.	
[?99]	N/A			Reports current [or last] command string in buffer. Same as [=].	
[?100]	N/A			Reports current setting of [p] pressure transducer gain command.	
[?102]	N/A			Reports current [N] increment mode setting.	0 = increment mode 1 = micro-increment mode 2 = µL mode
[?103]	N/A			Reports 1/O 1 state.	
[?149]	N/A			Reports total temperature compensation increments moved since last time plunger was at home (zero) position.	
[?156]	N/A			Reports Integrated pressure area of the last plunger move in count-seconds. When streaming is on, this includes continuation period.	
[?157]	N/A			Reports integrated pressure area of last streamed plunger move in count-seconds.	
[?159]	N/A			Reports the current [f] command state.	
[?160]	N/A			Reports the start cLLD count from last [^] command. The mathematical difference [?161] - [?160] will be >= to the [^] command value.	
[?161]	N/A			Reports the finish cLLD count from last [^] command. The mathematical difference [?161] - [?160] will be >= to the [^] command value.	
[?162]	N/A			Reports the currently loaded [N2] [u38_1] m value that is in memory.	
[?163]	N/A			Reports the currently loaded [N2] [u38_1] b value that is in memory.	

CAN Bus command summary

Table 5-13: Air-Z Premier CAN Bus command summary

Command	Operands	Command Description
On-the fly commands frame type = 0		
[V]	Same as RS232/ RS485	Set top velocity.
[T]	N/A	Terminate command execution.
Action commands frame type = 1		
All RS485 action commands are valid in CAN bus mode.		
Common commands frame type = 2		
[0]	N/A	Reset. Same as [!0].
[1]	N/A	Start loaded command in buffer. Same as [R].
[2]	N/A	Clear loaded command in buffer. Same as [C].
[3]	N/A	Repeat last command. Same as [X].
[4]	N/A	Stop action immediately; same as [T].
Report commands frame type = 6		
All RS232/RS485 report commands are valid in CAN bus mode.		

This page intentionally blank

6 Maintenance

About this chapter

This chapter provides maintenance information for the Air-Z Premier Air Displacement Pipette Pump.

The following parts are included:

- About this chapter, page 123
- Routine maintenance, page 123
- Cleaning method recommendations, page 124

Note: There are no replaceable components on the Air-Z Premier Air Displacement Pipette Pump.

Routine maintenance

Note: The following maintenance tasks should be performed regularly to ensure that the pump remains in good condition.

Table 6-1: Maintenance Activities

Frequency	Activity	Comments
Monthly	Inspect for fluid or other unwanted material on outside/bottom of pump.	Clean as needed.

Cleaning method recommendations

The Air-Z Premier Air Displacement Pipette Pump may be cleaned as follows.

- Pump body and tip adapter: use cleaners compatible with anodized aluminum pump body and stainless steel tip adapter.
- Exposed printed circuit boards: An air spray product can be used to remove dust.

7 Troubleshooting

About this chapter

This chapter provides troubleshooting guidance for the Air-Z Premier Air Displacement Pipette Pump.

The following parts are included:

- About this chapter, page 125
- Symptoms and solutions, page 126
- Error codes and corrective action, page 129

Symptoms and solutions

See Table 7-1 for common symptoms and their remedies. Also see Table 7-2 for any error codes that are received.

Table 7-1: Troubleshooting

Symptom	Possible cause(s)	Corrective action
Unit runs automatically	AutoRun switch set to standalone operation.	• Set AutoRun switch to normal operation. See "Configure DIP switches" (page 26).
No response to host commands; pump not operating	Pump not receiving power.	• Check 24V power to pump. • Verify Life LED is blinking and Error LED is OFF. See "Check LED indicators" (page 38) for locations. If no LEDs are lit, contact Customer Service. • Check cables (broken, shorted, or unconnected wires, connectors properly seated, proper connections according to pinout). For pinout, refer to Table 4-4 (page 28).
	No communications to pump. If in OEM mode, checksum error may have been received.	• Verify proper COM port is selected at host computer. • Verify any USB converter is working properly. • Verify proper pump address is selected. See "Configure DIP switches" (page 26). • Set DIP array SW1 switch 8 to ON. This will place the pump in a known baud rate and port configuration. If communication is then successful, make any other settings desired with switch 8 OFF as described on page 26 and check again. • Check cabling as above.
	Improperly constructed command strings	• Verify that proper pump address is entered in command string. • Verify that execute command [R] is being sent at end of command strings containing movement commands. • If DT mode is in use, verify that carriage return (ODh) is inserted at end of command string after [R] command. • If OEM mode is in use, make sure STX and ETX characters are in the string, and checksum is generated correctly. See error listing Table 7-2 (page 129).
Pump does not complete initialization command	Damaged PC board assembly (motor wiring connection or sensor issues)	Contact Customer Service.
	Mechanical obstruction	Check for obstruction of the pump mechanics and tip ejector.
	Other	See error code for initialization failure in Table 7-2 (page 129) to identify possible causes.
Tip eject mechanism does not return up before use or after ejecting tip.	Mechanism has become fouled with debris, or other mechanical failure has occurred. Misalignment or bad part geometry is possible.	Contact Customer Service.

Table 7-1: Troubleshooting (continued)

Symptom	Possible cause(s)	Corrective action
Tip is dripping	Volatile fluid	Use anti-drip [d] command.
	Loose tip	Replace tip.
	Wrong type of tip installed.	Only use Axygen® style tips.
	Pump is leaking internally.	Contact Customer Service.
	Tip adapter radius scratched.	Contact Customer Service.
Pump crashes into work table or other object	Improper design and control of geometry.	Observe all directions for mounting properly. Refer to "General mounting principles" (page 20), regarding alignment of tip adapter to prevent colliding of probe. Afterwards, check tip and adapter assembly to ensure they are not damaged.
Pump performance varies with different types of fluids	Pump command strings need to be refined to accommodate specific fluids and other factors for precise performance.	User is responsible for system calibration to accommodate all relevant factors, such as: • viscosity • liquid types • sample fluid volumes • throughput requirements • disposables • tip size This is often referred to as “liquid class development.”
Pressure streaming data not received	Cabling insecure.	Check cabling, e.g., for defective connectors.
	Streaming improperly configured. Pump and host must be set up symmetrically, with both configured to use same command port and streaming port, communication rate, etc.	See "Pressure data streaming" (page 78). See report commands in Table 5-10 (page 105). Use [?76] to report communication settings of pump, and [?77] to report streaming settings of pump. See Table 4-2 (page 26) for communication configuration instructions.
cLLD not functioning correctly.	Damaged electrical continuity between sample and cLLD circuitry	Touch a conductive tip to ground while streaming conductive measurements and verify that the signal saturates high. Ambient pressure reading should be approximately 760 counts.
	Tip not conductive.	Replace with conductive tip.
	The fluid currently being handled may have extremely low ionic strength.	Use cLLD only for fluids with adequate ionic strength. pLLD may be used instead. Use a ground plane under the liquid sample to increase sensitivity.
pLLD not functioning correctly.	Not configured correctly.	Modify and optimize pLLD settings for the application. • See "Pressure liquid level detect (pLLD), aspirate or dispense (t<n1>,<n2>)" (page 72). • Also see "pLLD operating recommendations" (page 73) • Set pressure gain. See "Set pressure transducer gain (p<n>)" (page 76).
pLLD fluid operation fails to find surface of liquid. LLD error has been issued.	See corrective action recommendations.	Check Z axis for proper movement. Check target liquid container for fluid.
	The [t] command plunger movement may have completed before Z axis travel has completed.	Break Z-axis motion into segments, and reset pLLD command before each segment.

Table 7-1: Troubleshooting (continued)

Symptom	Possible cause(s)	Corrective action
Daisy-chaining of pressure streaming not available.	Wrong communications protocol in use for multiple-pump pressure data streaming. Only CAN allows multiple-pump streaming.	Use CAN protocol for multiple-pump data streaming.
Tip eject failure	Tip not installed or pressed on too hard.	See "Insertion requirements for disposable tips" (page 39). Also see “Tip eject error” in Table 7-2 (page 129).
Operations involving small volumes of fluid are imprecise.	Tip in use is too large.	Use smaller tip to minimize the effects of surface tension.
	Plunger velocity needs to be adjusted.	Adjust velocity: lower for aspirating, higher for dispensing. See "Operating tips" (page 43).
	Blowout volume needed.	Add blowout volume when dispensing to ensure all the fluid is dispensed. Refer to "Example pipetting sequence for Air-Z Premier" (page 44).

Error codes and corrective action

Table 7-2 lists the error codes and corrective action for each. The blinking pattern of the on-board error LED is also shown for relevant error conditions.

⚠CAUTION

CAUTION: All errors reported by the pump should be captured by the user's software and the physical cause corrected before continuing operation. Failure to do so may result in damage to the pump or adversely affect pump performance, and void the warranty.

Table 7-2: Error codes and corrective action

Error code	Error LED pattern	Error	Description/possible cause	Corrective action
0	None (OFF)	None	N/A	None: error-free condition
1	1 blink	Initialization failure	Pump failed to initialize by finding home opto.	Look for foreign objects that could be preventing free movement of pump linkages.
2	N/A	Invalid command	Unrecognized command issued	Issue a valid command.
3	N/A	Invalid operand	An invalid parameter (<n>) was given with a command.	Issue command with valid parameter(s).
4	3 blinks	Pressure sensor fault	N/A	Please contact Customer Service.
5	N/A	Over pressure	Pressure transducer has saturated high or low. The gain setting [p] is too high for the fluid operation or something abnormal has happened to block the flow path.	This check must be turned on with [U80] or [u36]. The over pressure error will not trigger during execution of a [q] command. The [q] command generates its own errors as a result of pressure transducer saturation.
6	N/A	LLD error	No liquid detected with pLLD or hLLD operation. Plunger reached end of stroke before specified pressure threshold was exceeded.	Adjust pressure threshold or plunger velocity. See appropriate instructions in "Liquid level detection" (page 71).
			Capacitive measurement error may have occurred with cLLD if tip adapter has been grounded.	Make sure tip adapter does not become grounded.
7	N/A	Device not initialized	A move command was issued before the pump was initialized with the [Z] or [W] command.	Initialize with [Z] or [W] command before issuing any move commands.
8	N/A	Tip eject error	Tip sensor detected a tip after the tip eject command [E] was issued. Or, no tip was initially in place when [E] was issued. Tip pressed on too hard.	• Observe guidelines for tip insertion. See "Insertion requirements for disposable tips" (page 39). • Ensure tip is on before issuing tip eject command [E].

Table 7-2: Error codes and corrective action (continued)

Error code	Error LED pattern	Error	Description/possible cause	Corrective action
9	2 blinks	Plunger overload	Movement of plunger is blocked, This can also result during an anti-drip command [d] if the pump runs out of available stroke while maintaining vacuum above the fluid. See "Anti-drip command (d)" (page 77).	Re-initialization required. Check for excessive back pressure or something obstructing movement of pump mechanism.
10	N/A	Tip loss	Unexpected tip loss. Tip may not be pressed on hard enough, allowing tip to fall off during plunger movement	Re-install tip with appropriate force. Refer to "Disposable tip installation force and speed" (page 39).
11	4 blinks	CAN bus failure	N/A	Please contact Customer Service.
12	N/A	Invalid checksum	Checksum did not match the received string. Entire string is considered invalid.	Re-issue command string.
13	5 blinks	EEPROM fault	N/A	Please contact Customer Service.
14	Not implemented			
15	N/A	Command overflow	A move command was issued while pump was still busy executing previous command. Command string may contain more than 128 characters.	• Poll pump for idle status before issuing action commands (commands in buffer must complete before more action commands are accepted.) • Ensure command strings do not exceed 128 characters.
16	N/A	Clogged (blocked) tip	Tip blocked	• Change tip. • Check fluids for solids/coagulation.
17	N/A	Air in fluid	Aspiration/dispense of foam or bubbles. Fluid level in source container may be low.	Check fluid level of source container.
18	N/A	Bubbles/foam in fluid	Excessive foam in fluid source	Check fluid source for excessive foam.
19	N/A	Operation volume error	N/A	Restart fluid operation.

8 Customer support

About this chapter

This chapter provides the instructions you need to obtain Customer Service assistance, order parts and accessories, and return equipment for warranty service.

Contacting Customer Service

You may obtain assistance with the operation or repair of your product by contacting us at any of the following locations:

AMER Americas	Tricontinent Scientific, Inc. 12740 Earhart Avenue Auburn, CA 95602 USA Tel: +1 800 937 4738 Tel: +1 530 273 8888 liquidhandling.tcs@irco.com
APAC Asia Pacific	Gardner Denver Thomas Pneumatic Systems (Wuxi), Co., Ltd. No. 1 New Dong An Road Shuafang Town Wuxi, Xinwu District Jiangsu 214142 China Tel: +86 510 6878 2258 tricontinent.cn@irco.com
EMEA Europe, Middle East, Africa (Headquarters)	Gardner Denver Thomas GmbH Livry-Gargan-Str. 10 82256 Fürstenfeldbruck Germany Tel: +49 8141 2280 0 thomas.de@irco.com
Website:	http://www.tricontinent.com

Ordering parts and accessories

To view and/or download detailed product and accessory information and literature, please go to the product page for the Air-Z Premier Air Displacement Pipette Pump at www.tricontinent.com. Typical Information at this location may include the following:

- Specifications (data sheets)
- Dimensions
- Product and accessory ordering information

To order parts and accessories, or to obtain information not found on the Tricontinent website, contact Customer Support using any of the methods listed on the previous page.

Warranty and return information

The Air-Z Premier Air Displacement Pipette Pump is warranted against manufacturing defects for a period of one year. For detailed warranty and return instructions, please go to the product page for the Air-Z Premier Air Displacement Pipette Pump at www.tricontinent.com.

Please observe:

DO NOT ship the instrument back for repair until you are advised to do so by Customer Service and have been issued an RMA number.

DO NOT perform any unauthorized repairs.

There is no warranty expressed for syringes and plungers on products that contain these items, or on valves. However, we do guarantee the quality and workmanship of these items at the time they are shipped.

Obtaining technical support

If you require technical support, please reach out to our tech support team at this email address: techsupport.tcs@irco.com

Please include the following information:

- Product name
- Your company name
- Geographic area - AMER (Americas), APAC (Asia Pacific), or EMEA (Europe, Middle East, Africa)
- Serial number: Typically located on a label affixed to the product
- Firmware version: Firmware version may be queried with the [&] command (sent without brackets).
- In-depth description of the issue
- Any relevant data, command strings, videos etc. that our team may find useful in diagnosing the issue

9 Reference information

About this chapter

This chapter contains reference information to support use of the Air-Z Premier Air Displacement Pipette Pump.

The following subjects are included:

- About this chapter, page 133
- Pump addressing scheme, page 134
- OEM and DT timing and polling guidelines, page 135
- OEM communication protocol, page 137
- Data Terminal (DT) protocol, page 142
- CAN interface communications, page 144
- TCS Pump Commander overview, page 158
- Evaluation cables and accessories, page 166

Pump addressing scheme

As part of the communications protocol, every command string contains an address for the intended pump(s).

The address corresponds to a device number set by switches on the pump. There are 16 possible addresses for a pump. For RS232, RS485 and CAN, the overall hexadecimal addressing scheme is shown in Table 9-1. For RS232 and RS485 only, device settings with corresponding hex and ASCII values are shown in Table 9-2. For RS232 and RS485, the master address is always "0" (0x30). Thus the device addresses start at 1 and the pump DIP switch settings correspond to addresses 1-16. On a CAN bus, the master has no address. The pumps have addresses 0-15 (the pump address switches are zero indexed).

Note: Information for address switch settings are located at "Configure DIP switches" (page 26).

Note: CAN buses have no master address because the master device is predetermined by the CAN message direction bit—not by an address setting.

Table 9-1: Hexadecimal addressing scheme, RS232/485 and CAN

Address (hex)		
RS232/RS485	**CAN**	**Device**
30 (0)	N/A	Master address (master controller, host, personal computer, etc)
31...40 (1-16)	0...F	Addresses single device
41...5F	N/A	Addresses multiple devices. See Table 9-2.

Table 9-2: Device addressing values for RS232/485

Device number[1]	Single Device		Dual Device		Quad Device		All Devices	
	Hex Address	ASCII Address	Hex Address	ASCII Address	Hex Address	ASCII Address	Hex Address	ASCII Address
1	31	1	41	A	51	Q	5F	_
2	32	2						
3	33	3	43	C				
4	34	4						
5	35	5	45	E	55	U		
6	36	6						
7	37	7	47	G				
8	38	8						
9	39	9	49	I	59	Y		
10	3A	:						
11	3B	;	4B	K				
12	3C	<						
13	3D	=	4D	M	5D	]		
14	3E	>						
15	3F	?	4F	O				
16	40	@						

1. Assigned by switch settings on pump.

Note: Multiple-device addresses (Dual, Quad, All) cannot be used to query device status or to issue report commands. Each device must be queried separately. Were it not so, all the addressed devices would attempt to respond at once.

Notice in Table 9-2 that the RS232/485 protocol allows multiple-device addressing. A user can address two pumps (Dual Device), four pumps (Quad Device), or all 16 pumps (All Devices). Address 5Fh (All Devices), for example, can be used to perform a simultaneous action on all pumps, e.g. initialization. Afterwards, each pump can be addressed individually using 31h through 40h.

OEM and DT timing and polling guidelines

Master/slave relationship

For OEM and DT protocol, the host controller (host) and device (such as a pump or valve controller) have a master/slave relationship. The device never sends a message to the host independently; it is always in response to a host message. Every message “packet” has start and end characters that are protocol-specific. The host must receive and decode the response message from the device before it can send a new message packet to the device. See "OEM communication protocol" and "Data Terminal (DT) protocol" in the Reference information chapter for details.

- Sending additional command packets to the device while it is in the process of reading a packet from the RS485 UART FIFO or in the process of transmitting a packet back to the host will result in communication errors. Observe OEM or DT messaging handshake rules.
- All signaling, including status polling, fits within the timing framework described in "Signal timing" below. Observe included recommendations.

Signal timing

Following is a representative timing diagram of the master/slave communication process, with best-practice recommendations for associated timing parameters.

Figure 9-1. Master/slave timing

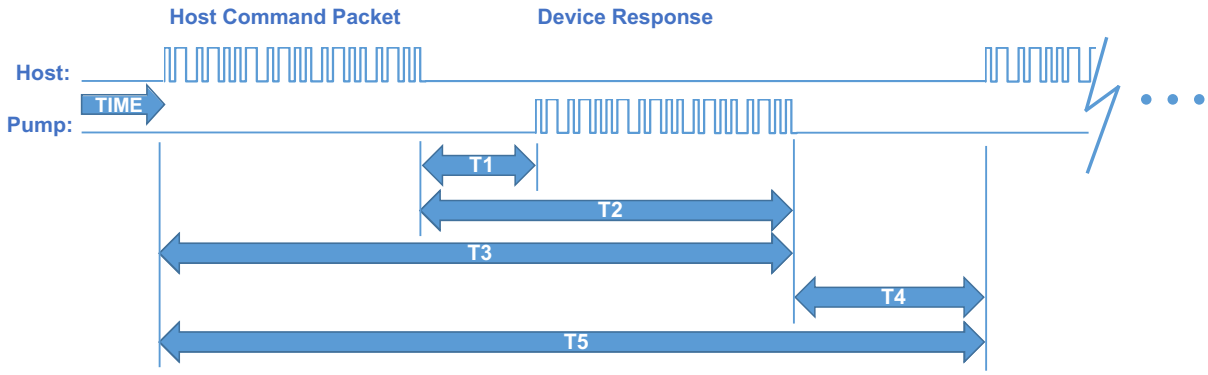

Timing intervals shown in Figure 9-1:

- *T1: time for device to begin responding.* Can vary due to device processing load (ongoing fluid operations, calibration commands), but is typically several milliseconds.
- *T2: time for device to finish responding.* Can vary depending on the length of the response string and baud rate.
- *T3: time for a total round trip master/slave message packet exchange.* Can vary based on command and response string length and baud rate.
- *T4: delay time for the device to transition from sending a response packet to waiting for the next host command packet.* This period should

be at least 10 ms, but 50 ms or greater is recommended so as to avoid overburdening the device with polling communications.

- *T5: timeout period after which, if the host has not received a response from the device, an error code should be generated.* This timeout period should typically be 250 ms or greater. At this point the host should query the device for an error code and process accordingly.

Polling alternatives

- CAN bus communication is event driven, making polling unnecessary. Also, CAN bus bandwidth is much higher.
- With the DT and OEM protocols, an alternative to polling for command completion is to use the [J] command to notify the host when a command is complete. See "Set auxiliary output I/O 1 high or low (J<n>)" (page 66). The host can monitor this signal and query status after it transitions high.

  Note: This method should only be used for commands or command strings that yield plunger movement. This technique cannot be used with immediate commands such as [T], [Q], and report commands.

OEM communication protocol

OEM communication is a robust protocol that identifies transmission errors. Table 9-3 describes each setting within the OEM communication protocol.

Table 9-3: OEM Protocol communication details

Serial bus configuration

Parameter	Setting
Baud Rate	9600 or 38400
Data Bits	8
Parity	None
Stop Bit	1

Command Block
(see "OEM protocol command block characters" for details)

Byte number	Byte name
1	SYNC (FFh)
2	STX (Ctrl B or 02h)
3	Device address
4	Sequence Number/Repeat flag
5+n	Data block (length n bytes)
6+n	ETX (Ctrl C or 03h)
7+n	Checksum

Answer Block
(see "OEM protocol answer block characters" for details)

Byte number	Byte name
1	SYNC (FFh)
2	STX (Ctrl B or 02h)
3	Master address (0 or 30h)
4	Status/error code
5+n	Data block (length n bytes)
6+n	ETX (Ctrl C or 03h)
7+n	Checksum

OEM protocol command block characters

The command block characters in the OEM communication protocol are described below. Any characters transmitted outside the command block protocol are ignored.

SYNC (FFh)

Used for backward compatibility with older model devices.

STX (Ctrl B or 02h)

The STX character indicates the beginning of a command string.

Device address

The device address is specific, selected on each individual device, as described in the instructions for that device.

Sequence number/repeat flag

The sequence number is a single byte that conveys both a sequence number (legal values: 0 through 7) and a bit flag indicating that the command block is being repeated due to a communications breakdown. The sequence number is used as an identity stamp for each command block. Since it is only necessary that every message carry a different sequence number from the previous message (except when repeated), the sequence number may be toggled between two different values (e.g., 1 and 2) as each command block is constructed. During normal communication exchanges, the sequence number is ignored. If, however, the repeat flag is set, the device compares the sequence number with that of the previously received command block to determine if the command should be executed or merely acknowledged without executing.

Note: If the operator chooses not to use the error detection option, the sequence number can be set to a fixed value of 1 (31h).

The following two scenarios clarify this error detection mechanism.

Scenario 1

1. The computer sends a command block stamped with sequence number 1 to the device.
2. The device receives the command, sends an acknowledgment to the PC, and executes it.
3. Transmission of the acknowledgment message is imperfect; the PC does not receive it.
4. The PC waits 100 ms for the acknowledgment, then retransmits the command block with the sequence number left at 1 and the repeat bit set to indicate a retransmission.
5. The device receives the transmission, identified as such by the repeat bit.
6. The device checks the sequence number against that of the previously received command block. Noting a match, the device sends an acknowledgment to the PC, but does not execute the command (since it has already been executed as indicated by the repeat bit).

7. The PC receives the acknowledgment and continues with normal communications.
8. The next command block is stamped with sequence number 2 to indicate a new command.

Scenario 2

1. The computer sends a command block stamped with sequence number 1 to the device.
2. The device never receives the command due to a communication error and thus does not send an acknowledgment to the PC.
3. The PC waits 100 ms for the acknowledgment then retransmits the command block with the sequence number left at 1 and the repeat bit set to indicate a retransmission.
4. The device receives the retransmission, identified as such by the repeat bit.
5. The device checks the sequence number against that of the previously received command block. Noting a mismatch, the device recognizes this as a new command block and sends an acknowledgment to the PC. It then executes the command.
6. The PC receives the acknowledgment and continues with normal communications.
7. The next command block is stamped with sequence number 2 to indicate a new command.

Scenario 3

1. The computer sends a command block stamped with sequence number 1 to the device.
2. The device receives the command and computes the checksum. The checksums do not match.
3. The device acknowledges the command with a checksum error.
4. The host receives the acknowledgment, increases the sequence number, and repeats the command.

Sequence number/repeat byte structure

The sequence number/repeat byte is constructed as follows:

Bit #	7	6	5	4	3	2	1	0
Value	0	0	1	1	REP	SQ2	SQ1	SQ0

REP: Value is 0 for non-repeated command, 1 for repeated.

SQ0 - SQ2: Sequence value, as shown below:

Sequence Value	SQ2	SQ1	SQ0
1	0	0	1
2	0	1	0
3	0	1	1
4	1	0	0
5	1	0	1
6	1	1	0
7	1	1	1

Data block (length n bytes)

The data block consists of an ASCII string of commands sent to the device.

ETX (Ctrl C or 03h)

The ETX character indicates the end of the command string.

Command block checksum

The checksum is the last byte of the message string. All bytes (excluding line synchronization and checksums) are XORed to form an 8-bit checksum. This is appended as the last character of the block. The receiver compares the transmitted value to the computed value. If the two values match, an error-free transmission is assumed. Otherwise, a transmission error is assumed.

For example, if the host were to send the [Q] command to the device at address 1, in hexadecimal these characters would be 0x02, 0x31, 0x30, 0x51, 0x03. The checksum for these values is 0x51.

OEM protocol answer block characters

The answer block characters in the OEM communication protocol are described below. When developing a parsing algorithm, the programmer should key on the OxFF as the beginning of the answer block and the checksum (character after ETX) as the end of the answer block.

Sync (FFh)

Used for backward compatibility with older model devices.

STX (Ctrl B or 02h)

The STX character indicates the beginning of a response string.

Master address

The master address is the address of the host system. This should always be "0" or 30h.

Status and error codes

The status and error codes define device status and notify of error conditions. For a complete listing of error codes, see the instructions for the particular device.

Data block (length n bytes)

This is the response from all report commands except the [Q] command. The [Q] command asks for a status byte only. Therefore the data length is zero.

ETX (Ctrl C or 03h)

The ETX character indicates the end of the response string.

Answer block checksum

The checksum is the last byte of the message string. All bytes (excluding line sync and checksum) are XORed to form an 8-bit checksum. This is appended as the last character of the block. The receiver compares the transmitted value to the computed value. If the two values match, an error-free transmission is assumed; otherwise, a transmission error is assumed.

For example, if the host were to send the [Q] command to the device at address 1, in hexidecimal the device's "idle" response would be 0x02, 0x30, 0x60, 0x03, 0x51. The checksum for the first four bytes is 0x51.

Data Terminal (DT) protocol

The DT protocol can be used easily from any terminal or terminal emulator capable of generating ASCII characters at 9600 or 38400 baud, 8 bits, and no parity. Table 9-4 lists each setting of the DT protocol.

Table 9-4: DT Protocol communication details

Serial bus configuration

Parameter	Setting
Baud Rate	9600 or 38400
Data Bits	8
Parity	None
Stop Bit	1

Command block
(see "DT protocol command block characters" below, for details)

Byte number	Byte name
1	Start character (ASCII “/” or 2Fh)
2	device address
2+n	Data block (length n)
3+n	End character (carriage return, “CR” or 0Dh)

Answer block
(see "" below, for details)

Byte number	Byte name
1	Start character (ASCII “/” or 2Fh)
2	Master address (ASCII “0” or 30h)
3	Status character
3+n	Data block (if applicable)
4+n	ETX (Ctrl C or 03h)
5+n	Carriage return (“CR” or 0Dh)
6+n	Line feed (0Ah)

DT protocol command block characters

The command block characters in the DT communication protocol are described below.

Start character

The start character (ASCII “/” or hex 2Fh) indicates the beginning of a message.

device address

The device address is an ASCII character specific to each device.

Data block (length n)

The data block consists of the ASCII data or commands sent to the device or host.

End character

The end character (carriage return, ASCII “CR” or ODh) indicates the end of the message.

DT protocol answer block characters

The answer block characters comprising the DT communication protocol are described below.

Start character

The start character (ASCII “/” or hex 2Fh) indicates the beginning of the response.

Master address

The master address is the address of the host system. This should always be “0” or 30h.

Status character

The status and error codes define device status and signal error conditions. See the description of the [Q] command in the main part of the product manual.

Data block

This is the response from all report commands with the exception of the [Q] command.

ETX

The ETX character (Ctrl C or 03h) indicates the end of the response string.

End character(s)

The carriage return (“CR” or 0Dh) and line feed (“LF” or 0Ah) terminate the reply block.

CAN interface communications

CAN (Controller Area Network) is a two-wire, serial communication bus. It eliminates polling sequences that verify task completion. Using CAN, the pumps or other devices on the bus asynchronously report to the master host when they have finished the current task.

Note: The pumps use a CAN controller and transceiver chip compatible with Philips Semiconductor CAN bus specification, version 2.0.

Alternative use of pump buses (not recommended)

Please note that the pump communication buses (RS485/CAN) use liquid handling industry-developed custom communication protocols (OEM, DT, and CAN). It is possible (but not recommended) for non-pump devices using a different communication protocol to exist on the same RS485 or CAN bus, as long as the non-pump device's protocol does not interfere with the pump protocol.

⚠CAUTION

CAUTION: Tricontinent Scientific, Inc. does not encourage or warrant any use of the pump buses with non-pump devices, regardless of information provided by Tricontinent Scientific, Inc. Results may be unsatisfactory.

With CAN networks, it is theoretically possible have pump devices which use the liquid handling industry-specific protocol and non-pump devices using a different protocol on the same bus, but the two protocols must not inadvertently address the wrong device. For example, if a non-pump device used the CANOpen NMT protocol, and we compare the syringe pump industry's 11-bit message structure with CANOpen, it is clear that the function code and node ID fields are not in the same locations. Compatibility would require that messages to/from the liquid-handling pump are always distinct from the messages generated to/from any CANOpen device. This is theoretically possible, since the 4-bit CAN Device ID (Device address) of the pump bus protocol overlaps the Node ID field of CANOpen:

CANOpen	Function Code				Node ID						
Syringe Pump Industry	Direction	Group			Device ID				Frame (like function code)		
					|<----------ID Overlap----------\>|						

As long as the ID Overlap bits are unique to each device, it appears possible that messages sent to and received from each device could be distinguished. Four bits would allow 16 devices. It is also clear that pump devices do not strictly fit into any of the CANOpen communication models. The closest fit appears to be the NMT master/slave relationship, although the pump will send an unrequested asynchronous command-completion message when a move command completes. Pressure data streaming (Air-Z products) looks more like the consumer/producer push model. Any host implementation of multiple protocols would have to be designed to handle these situations.

CAN messages

Standard CAN messages consist of 18-bit frames. Each frame has a 12-bit Œ] r š Œ šiel}v and a 6-bit } v š Œ}o. These are all the bits that must be considered at the programming level. On the physical CAN hardware there are additional bits that occur in a message, such as the start bit and CRC Field bits; but these are not discussed here, since they are implemented at the hardware level.

Within the arbitration field, there is an 11-bit message identifier (MID), and within the control field a 4-bit data length identifier.

The eleven MID bits are used to:

€ Indicate which device on the bus the message involves.

€ Identify the message type.

€ Show the direction of the message (either to or from the master device).

The 4-bit data length identifier within the control field (the DLC) specifies the length of the data block.

Data blocks can be from zero to eight bytes in length. Any message that requires more than eight bytes must be sent in a series of multi-frame messages. The receiving unit then assembles the data from the separate frames into one message. Setting the DLC bits to values greater than 8 has no effect. The maximum data block is limited to 8 bytes.

CAN message construction

The CAN message formats used to communicate between host and pump are described in this section.

Each message frame begins with the message identifier (MID), followed by three bits that are always zero (RTR, IDE, and r0), the DLC, and finally the data block. The bits are grouped as shown below:

CAN arbitration field				CAN control field				
MID				RTR	IDE	r0	Data Length (DLC)	CAN data block
Direction	Group	Device	Frame					
X	010	XXXX	XXX	0	0	0	XXXX	0-8 Bytes

Direction bit (1)

CAN arbitration field				CAN control field				
MID				RTR	IDE	r0	Data Length (DLC)	CAN data block
Direction	Group	Device	Frame					
X	010	XXXX	XXX	0	0	0	XXXX	0-8 Bytes

The Direction bit determines whether the current message is to or from the master. •0Ž means that the message is from master to slave; •1Ž means the message is from the slave to the master.

Note: Peer-to-peer messaging is not supported.

Type 2: Common commands. Frame bits = 010

This frame type is used for commands that are common to every device on the bus. The command is a single ASCII character in the data block. The ASCII command characters with hexadecimal equivalents are described here:

Command	Description
0 (0x30 in hex)	Reset. This resets the pump and restarts the boot request procedure.
1 (0x31 in hex)	Start loaded command. The same as sending a run [R] command after a string has been loaded.
2 (0x32 in hex)	Clear loaded command. This clears out the command buffer. This is the same as the [C] command.
3 (0x33 in hex)	Repeat last command. This command is identical to the [X] command (execute last command or string).
4 (0x34 in hex)	Stop action immediately. This is the same as the terminate [T] command.

Type 3: Multi-frame start message. Frame bits = 011

This frame type specifies that the next pump command will be longer than the 8-byte maximum of a single CAN message. Subsequent frames will follow to complete the message. By definition, the frame will contain 8 bytes of data.

Type 4: Multi-frame data. Frame bits = 100

This frame type identifies a frame that is within a multi-frame message. One or more multi-frame data messages can occur between a multi-frame start message and the end of a multi-frame message. By definition, it will contain 8 bytes. If less than 8 bytes of data are required to complete the pump command, a Type 4 frame is unnecessary; the command will start with a Type 3 message and complete with an action or report frame type.

Note: The last frame of a multi-frame message for action commands will be type 1. The last frame of a multi-frame message response from the pump for report commands will be type 6.

Type 5: Event Messages. Frame bits = 101

Type 5 frames are used to send unsolicited messages from the pump. Currently, this frame type is only used to send streaming pressure or capacitance data from a pump, in applicable products.

Type 6: Report/answer commands. Frame bits = 110

This frame type is used to query information from the pump. It is similar in operation to the query commands (e.g. [?]) used in the OEM and DT protocols. The report command is one or two bytes long since the command is sent as ASCII characters in the data block.

When the pump responds to a Type 6 query, the first byte of the data block is the status byte. It is defined like the status byte in the RS485 and RS485 protocols. The next byte is a null character. The remaining six bytes contain the report command response in ASCII. If the pump is only reporting current status, the message is only two bytes long. If the reply consists of more than six bytes, multi-frame messages are used.

Handling of pump boot requests

When the pump is first powered up or receives a system reset command (frame type 2, command 0 or [!0]), the pump notifies the CAN host of this condition by sending a boot request message at intervals of approximately 1 second until it receives a boot request response from the host. Boot request responses from the host are sent using a MID Group 1, which is reserved for this purpose. The frame type must be 2 when the pump sends a boot request to the host, and the frame type must be 0 when the host replies to the boot request. In the reply, the host has the opportunity to change the pump's address, if desired. In order for a pump to accept the host's boot request reply, the host must specify the pump's group ID and device ID (as set by the address switch or switches) in the Node ID field. This is how a pump on the bus determines that the boot request reply from the host has been sent to it.

When a pump accepts the host's reply, it uses the Slave ID field to set its CAN bus address for all subsequent messages (until a reset or power cycle occurs). The Slave ID may be any value from 0 to 127 (0x00-0x7F). This capability can free up sixteen Group 2 addresses (i.e., the Group ID can be changed), but does not allow more than sixteen Group 2 pumps on the bus. This is because at power-up all pumps belong to Group 2 by default and have only sixteen possible switch-selectable addresses and therefore only sixteen pumps can be addressed from the Node ID field. To further clarify: if two pumps both have their switches set to address 4, both will receive and process the host's boot request reply to Group 2, address 4; and both pumps will set themselves to the same Slave ID, creating a communication conflict.

In the following first two examples, the host sets the pump address (Slave ID) to the same values as the pump's switch-selected address.

Example 1. The pump address DIP switches are set to address 0.

1. Pump sends boot request (Group=1, Frame=2):

Direction	Group	Device	Frame	RTR/IDE/r0	Length
1	001	0000	010	000	0000

2. Host acknowledges:

Direction	Group	Device	Frame	RTR/IDE/r0	Length	Data bytes[1]	
						Node ID[2]	Slave ID[3]
0	001	0000	000	000	0010	0010 0000	0010 0000

1. Node ID = Group ID (2) high nibble, + pump address (0) low nibble = 0010 0000
   Slave ID = Same as Node ID
2. The pump will save the Node ID to use for message filter Group ID.
3. In order for the Slave ID to be accepted, the host must pass the correct Node ID, which is always Group 2 in data byte 0 upper nibble, and the device address as set with the DIP switches in the lower nibble.

Acknowledgment details:

Direction = 0	Host to slave
Group = 1	Boot request response group
Device = 0	Always 0 in boot response
Frame = 0	Boot request response frame
RTR/IDE/r0 = 0	All three always 0
Length = 2	Two data bytes in return message

Note: Boot MID is the same for all nodes.

Example 2. The pump address DIP switches are set to address 6.

1. Pump sends boot request:

Direction	Group	Device	Frame	RTR/IDE/r0	Length
1	001	0110	010	000	0000

2. Host acknowledges:

Direction	Group	Device	Frame	RTR/IDE/r0	Length	Data bytes[1]	
						Node ID[2]	Slave ID
0	001	0000	000	000	0010	0010 0110	0010 0110

1. Node ID = Group ID (2) high nibble, + pump address (6) low nibble = 0010 0110
   Slave ID = Same as Node ID
2. The pump will save the Node ID to use for message filter Group ID.

Acknowledgment details:

Direction = 0	Host to slave
Group = 1	Boot request response group
Device = 0	Always 0 in boot response
Frame = 0	Boot request response frame
RTR/IDE/r0 = 0	All three always 0
Length = 2	Two data bytes in return message

Note: Boot MID is the same for all nodes.

Example 3. The pump address DIP switches are set to address 6, and the pump address is changed to 127.

After the pump receives this message, it will only accept messages (until the next power cycle or reset) from the host that are addressed with a MID using Group 7 and device address 15.

1. Pump sends boot request:

Direction	Group	Device	Frame	RTR/IDE/r0	Length
1	001	0110	010	000	0000

2. Host acknowledges:

Direction	Group	Device	Frame	RTR/IDE/r0	Length	Data bytes	
						Node ID	Slave ID
0	001	0000	000	000	0010	0010 0110	0111 1111

A final note regarding a pump's boot request. The pump's CAN address as set by the pump's DIP switches is one less than the pump's address that the address DIP switches set in the serial DT or OEM communication protocols. In other words, CAN device addresses are zero indexed and DT or OEM device addresses are 1 indexed. This is because in the DT and OEM protocols, index zero is reserved for the host. In the CAN protocol, the direction bit determines the host and a device address is not needed for the host.

CAN host and pump message exchanges

Pump response

When a pump receives a command, finishes a command, encounters an error condition, or responds to a query, it sends an answer frame to the host using the same frame type as the command it received. Generally, it will have the following format:

<MID><RTR/IDE/r0><DLC><Answer>

Where:

<MID>	11-bit message identifier. The direction bit is 1. The group number and the frame type are the same as received. Device is the current device address.
<RTR/IDE/r0>	Always zero.
<DLC>	4-bit data length code
<Answer>	Data bytes. The first byte of the data block is always the status byte. It is defined as in the table with this title: “Error codes, status byte with ASCII and hexadecimal values” in the main part of the product manual. The second byte is a null character. The remaining bytes contain the response in ASCII format. If the reply consists of more than six bytes, multi-frame messages are used.

Note: Only one command of a given frame type can be in progress at any time: e.g., after issuing a command to a pump with frame type = 1, the master must wait for the answer with frame type = 1 before issuing the next command with frame type = 1. If a second command of the same type is sent with-

out waiting, a command overload status results. Commands with different frame types can be in progress at the same time (e.g., an action command and a query command).

Example host/pump exchanges

The following are typical exchanges between the host and pump for action commands, multi-frame commands, common commands, and query commands.

Action command example

The host sends a [ZR] command to a pump, where the pump Slave ID is set to Group 2, device address 0.

1. Host sends:

Direction	Group	Device	Frame Type	RTR/IDE/r0	DLC	Data bytes
0	010	0000	001	000	0010	0x5A 0x52 (“ZR”)

2. Pump acknowledges immediately:

Direction	Group	Device	Frame Type	RTR/IDE/r0	DLC
1	010	0000	001	000	0000

3. After completing execution of the command, pump reports status:

Direction	Group	Device	Frame Type	RTR/IDE/r0	DLC	Data bytes
1	010	0000	001	000	0010	0x60 0x00h (“`0”)

Note: “`0” decodes as first byte status = idle, followed by a null character (hex zero).

Multi-frame command example

The host sends the command string [Z2S31A3000gHD300G10G5R] to a pump, where the pump Slave ID is set to Group 2, device address 0.

1. Host sends in three consecutive messages:

Direction	Group	Device	Frame Type	RTR/IDE/r0	DLC	Data bytes
0	010	0000	011	000	1000	0x5A 0x32 0x53 0x33 0x31 0x41 0x33 0x30 (“Z2S31A30”)

Direction	Group	Device	Frame Type	RTR/IDE/r0	DLC	Data bytes
0	010	0000	100	000	1000	0x30 0x30 0x67 0x48 0x44 0x33 0x30 0x30 (“00gHD300”)

Direction	Group	Device	Frame Type	RTR/IDE/r0	DLC	Data bytes
0	010	0000	001	000	0110	0x47 0x31 0x30 0x47 0x35 0x52 (“G10G5R”)

Note: The last frame type of a multi-message command is the type of command being sent. This example is an action command. Therefore the last frame type is type 1. The first message in a multi-message command is type 3 and messages between the first and last are type 4.

2. Pump acknowledges immediately after receiving the type 1 command:

Direction	Group	Device	Frame Type	RTR/IDE/r0	DLC
1	010	0000	001	000	0000

3. After completing execution of the command, the pump reports status:

Direction	Group	Device	Frame Type	RTR/IDE/r0	DLC	Data bytes
1	010	0000	001	000	0010	0x60 0x00h (“`0”)

Note: “`0” decodes as first byte status = idle, followed by a null character (hex zero). For multi-frame commands, the pump only sends an acknowledgment for the last frame.

Common command example

After the host has sent command [A1000A0] to the pump, it can send command 0 of frame type 2 to a pump and initiate execution of the buffered command string. The pump in this example has a Slave ID set to Group 2, Device address 0.

1. Host sends:

Direction	Group	Device	Frame Type	RTR/IDE/r0	DLC	Data bytes
0	010	0000	010	000	0001	0x31 (“1”)

2. Pump acknowledges:

Direction	Group	Device	Frame Type	RTR/IDE/r0	DLC
1	010	0000	010	000	0000

3. After executing the command, pump reports status:

Direction	Group	Device	Frame Type	RTR/IDE/r0	DLC	Data bytes
1	010	0000	010	000	0010	0x60 0x00h (“`0”)

Query command examples

Example: the host sends report command 29 of frame type 6 to a pump, with the pump Slave ID set to Group 2, device address 1.

1. Host sends:

Direction	Group	Device	Frame Type	RTR/IDE/r0	DLC	Data bytes
0	010	0001	110	000	0010	0x32 0x39 (“29”)

2. Pump reports:

Direction	Group	Device	Frame Type	RTR/IDE/r0	DLC	Data bytes
1	010	0001	110	000	0010	0x60 0x00h (“`0”)

Note: For query commands, no acknowledge frame is needed. The report command response is assembled and returned immediately.

Example: the host sends report command 23 of frame type 6 to a pump, and the pump Slave ID is set to Group 2, device address 1.

1. Host sends:

Direction	Group	Device	Frame Type	RTR/IDE/r0	DLC	Data bytes
0	010	0001	110	000	0010	0x32 0x33 (“23”)

2. Pump reports:

Direction	Group	Device	Frame Type	RTR/IDE/r0	DLC	Data bytes
1	010	0001	011	000	1000	0x60 0x00h 0x49 0x50 0x5A 0x3A 0x20 0x30 (“`0IPZ: 0”)

Direction	Group	Device	Frame Type	RTR/IDE/r0	DLC	Data bytes
1	010	0001	110	000	0101	0x38 0x32 0x39 0x31 0x36 (“82916”)

Note: For a multi-frame reply, the start frame is type 3, the middle frame is type 4 (if needed), and the last frame is type 6 since type 6 indicates a report command.

Action command example with error

The host sends the [A4000A0R] command to a pump, where the pump Slave ID is set to Group 2, device address 0.

1. Host sends:

Direction	Group	Device	Frame Type	RTR/IDE/r0	DLC	Data bytes
0	010	0000	001	000	1000	0x41 0x34 0x30 0x30 0x30 0x41 0x30 0x52 ("A4000A0R")

2. Pump acknowledges immediately:

Direction	Group	Device	Frame Type	RTR/IDE/r0	DLC
1	010	0000	001	000	0000

3. After parsing the command and finding an error (in [N0] mode, an absolute move of 4000 is not supported), the pump reports status of 0x63 (invalid operand):

Direction	Group	Device	Frame Type	RTR/IDE/r0	DLC	Data bytes
1	010	0000	001	000	0010	0x63 0x00h ("**c**0")

TCS Pump Commander overview

TCS Pump Commander (Commander) is a convenient user interface to these Tricontinent devices: Air displacement pumps, syringe pumps, and valve controllers. It can be used to send commands to any Tricontinent device that uses the pump command protocol. TCS Pump Commander is user-friendly and easy to set up and get running; it requires no programming. TCS Pump Commander contains tools for observing device behavior and determining best settings for many operations. For some operations, it is essential.

This overview acquaints the user with Commander and its capabilities, introducing the main task windows and their purposes. For actual operating instructions, see the extensive help documentation integrated into the TCS Pump Commander. The help feature also includes links to current copies of the Tricontinent product manuals.

The functionality described here begins with TCS Pump Commander version 2.1.0, which runs on Windows 7 and Windows 10 operating systems.

Features

- This version of TCS Pump Commander supports Tricontinent liquid-handling syringe pumps, valve controllers, and air displacement pumps.
- Commander connects with and recognizes the device it is connected to automatically, and loads the command set and parameters needed to use the Commander tools for that particular device. For this to occur, the device must be running a recent version of firmware that supports this communication.
- If the device cannot be connected automatically, a Communication Setup screen will open, allowing the connection to be made manually. This screen is accessible from any of the other task windows.
- The software automatically sets the available task windows according to whether an Air-Z or syringe pump device is connected, as shown below. Drop-down menus on most screens allow navigation to other task windows.

Air-Z pump menu

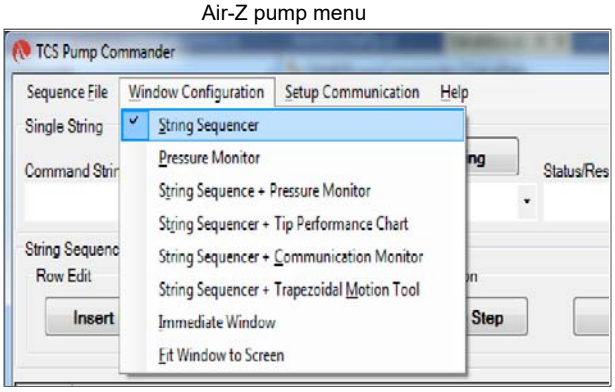

Syringe pump menu

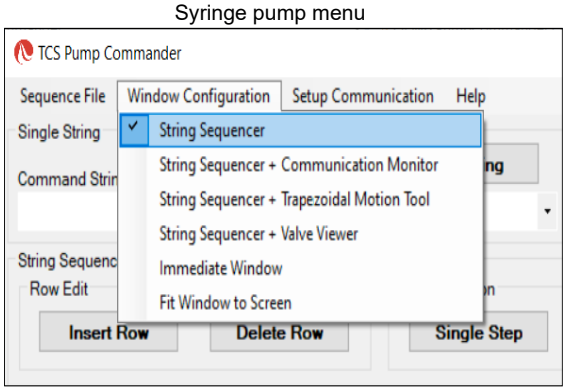

- The user can move directly from any window to any other.
- Commander allows commands to be entered while observing responses in the displayed charts and data.
- Zooming can be done by selecting the zoom area with the mouse.

Task windows

String Sequencer Window (any device)

The String Sequencer Window allows commands to be entered and sent, either singly or in a sequence, to any device address on the bus. Command strings and sequence can be saved and called up to run whenever needed.

Commands and the device's response when polled are shown.

By default, TCS Commander opens to this window.

Many of the other task window configurations include the String Sequencer, so that real-time charting and data may be observed as commands are issued.

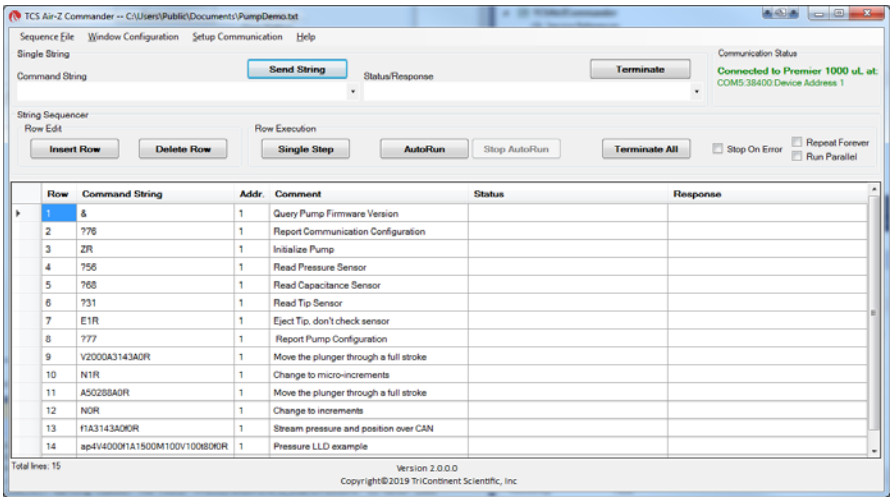

Pressure Monitor Window (Air-Z only)

The Pressure Monitor Window provides three primary tools: the Streaming Data Chart, the Pressure Trace Manager, and the [q] command tool. The Pressure Monitor Window may be opened with or without the String Sequencer attached (Pressure Monitor or String Sequencer + Pressure Monitor).

In all the tools, single command strings may be sent while viewing the effects on the display. If the String Sequencer Window is attached, single or multiple command strings can be sent.

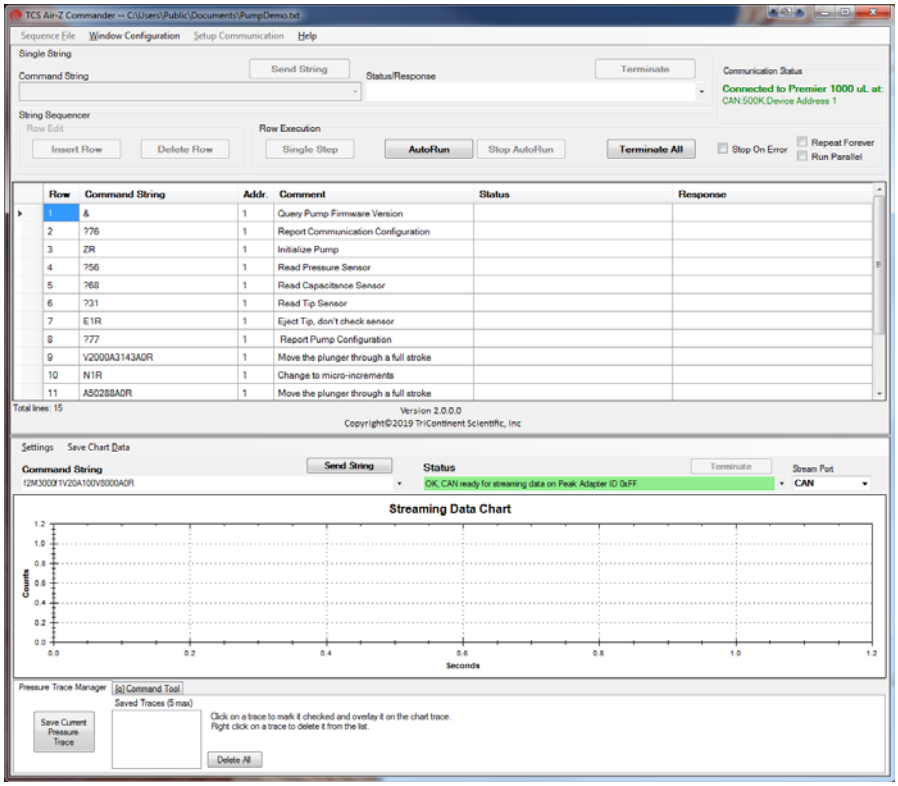

Streaming Data Chart. The Streaming Data Chart shows streaming data from an Air-Z pump in real time. The chart shows moving plunger position, pressure count, and optionally capacitive count (Air-Z Premier only). This information assists in determining optimal settings for liquid level operations. Liquid level operations are described in the product manual.

Pressure traces can be stored and repeated for evaluating consistency.

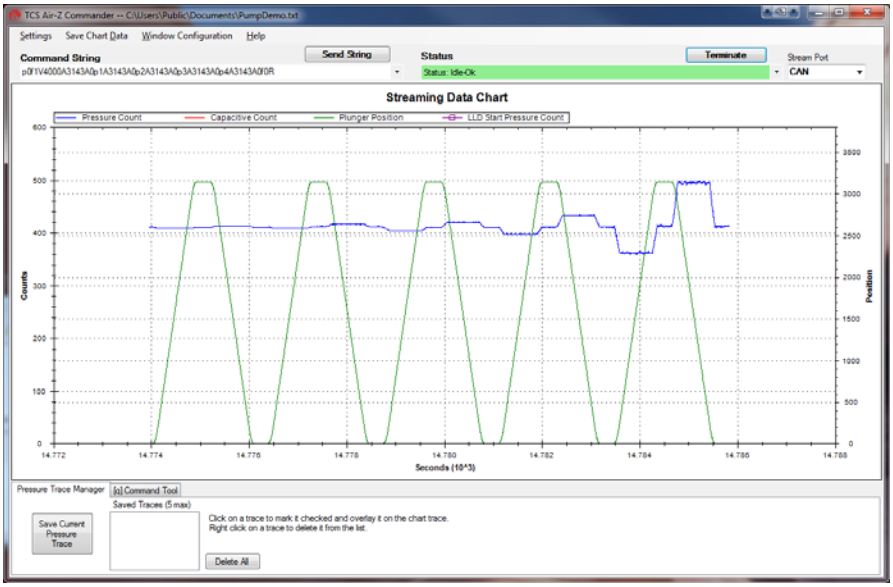

Pressure Trace Manager. The Pressure Trace Manager is a tool for monitoring consistency in identical, repeated operations. The interface allows you to save and plot up to five pressure traces at one time for comparison. If the pressure traces are different, it is likely that the aspirated/dispensed volumes are different too.

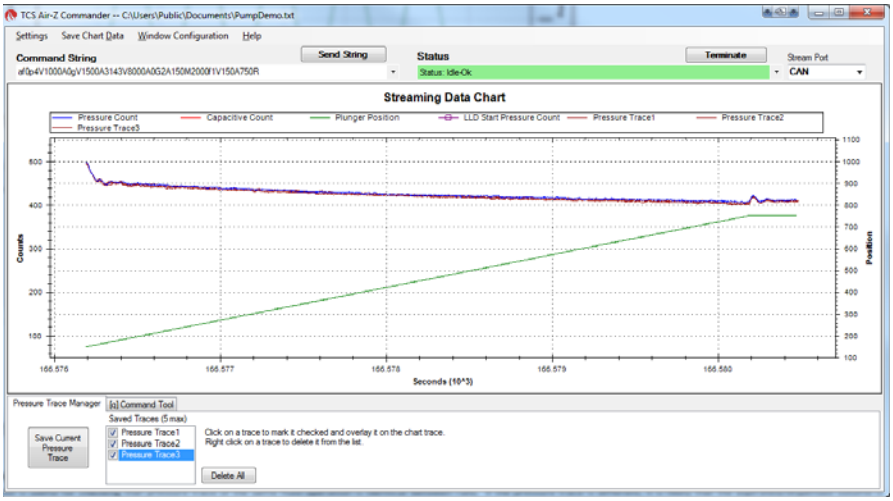

[q] command tool. The [q] command tool helps the user determine the operation validation [q] command arguments, <n1> and <n2>. Operation validation monitors fluid operation and detects tip clogs, aspiration of air or bubbles, and failed dispenses. It also verifies that the expected amount of fluid was handled.

A tab at the bottom of the Pressure Trace Window takes you to this item.

Two forms of the tool are available. Only one of them however, is recommended, as explained in the help documentation. The product manual contains detailed instructions for operation validation.

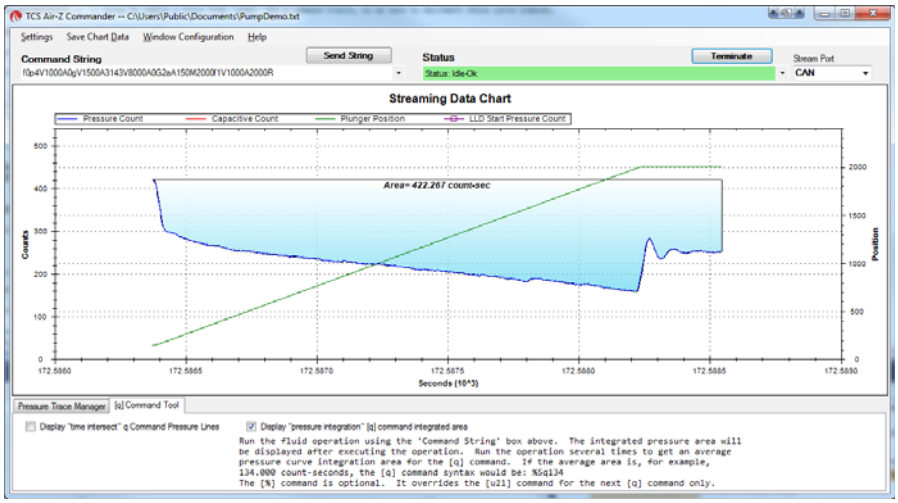

String Sequencer + Tip Performance Chart Window (Air-Z only)

The Tip Performance Chart is a tool that predicts fluid aspiration for a given tip and fluid operation, and gives the user command parameters needed to more accurately use the Air-Z pump's [N2] operating mode (sending commands in uL units). The Tip Performance Chart Window is configured to display with the String Sequencer window.

When a command is sent to move a specific number of microliters (µL), the µL number is converted by firmware to the number of increments the plunger must move in order to displace the specified fluid volume.

There is an inherent non-linearity in the conversion process, and this window provides help in selecting variables that compensate for this non linearity. The selected values can be copied to a command string for evaluation.

The chart displays data showing how far a plunger must move for a given fluid operation for different Axygen® tips. Data sets are included for four Axygen® tips for forward and reverse pipetting, and the user can create and save additional data sets. The String Sequencer part of the screen can be expanded or reduced, as the arrows below indicate.

Detailed N2 mode operation is described in the product manual.

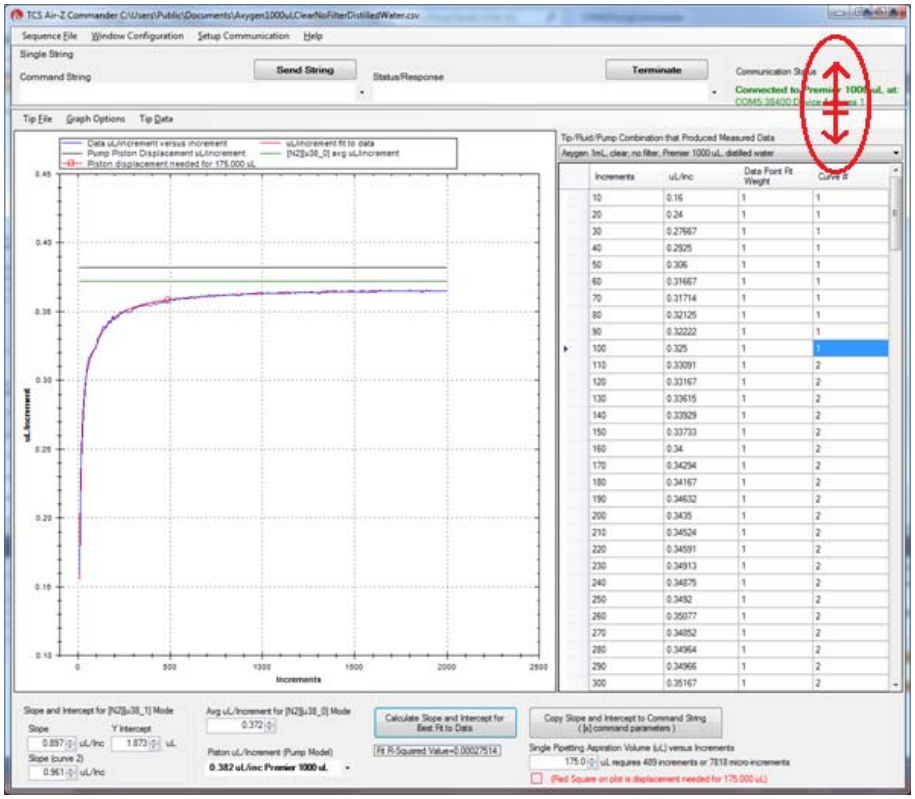

String Sequencer + Communication Monitor Window (any device)

The Communication Monitor Window allows the user to observe communication back and forth between device and host. This window displays all bytes that are transferred between device and host for a given command sent through the String Sequencer portion of the display.

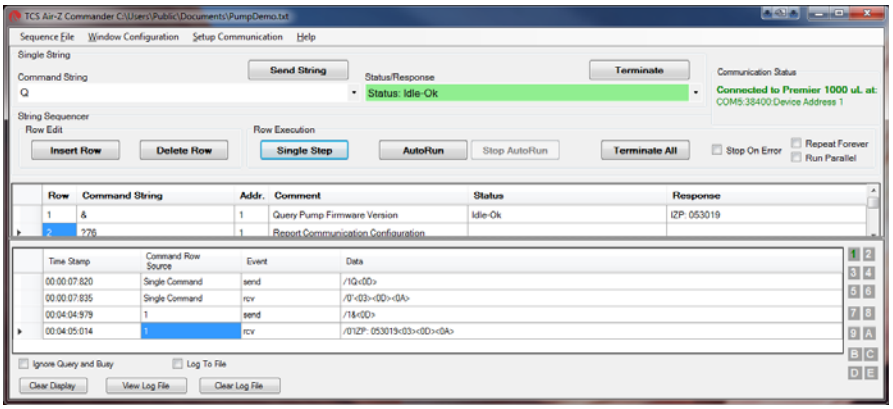

String Sequencer + Trapezoidal Motion Window (any device)

The Trapezoidal Motion Tool displays plunger trajectory for different settings. The user can see how movement is affected for different values of velocity, acceleration, and move distance, allowing the user to try different settings and optimize the movement profile for a given move command. The Trapezoidal Motion Window is configured to display with the String Sequencer window. Plunger motion settings are described in the product manual.

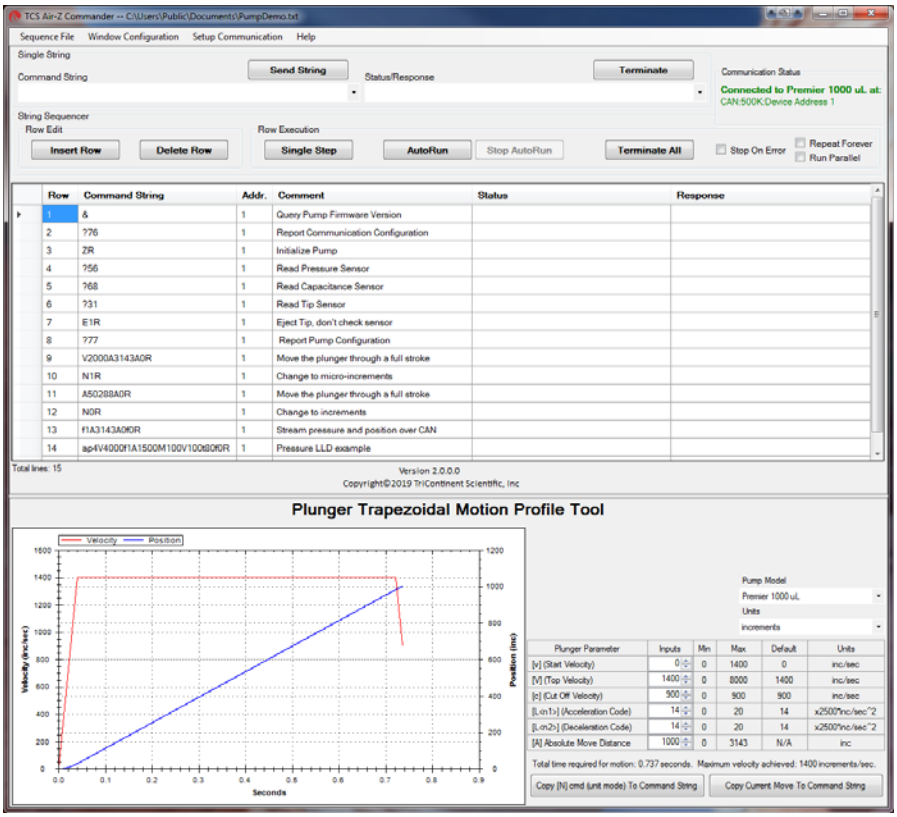

String Sequencer + Valve Viewer Window (syringe pumps and Valve Controller only)

The Valve Viewer shows the current and available valve positions for the connected device as commands are selected. The interior of the valve is shown as well, so the user can see the fluid path change as valve positions change. This can be useful as most valves are opaque, with no visual means to know or verify the current valve position.

Valve movements are described in the product manual.

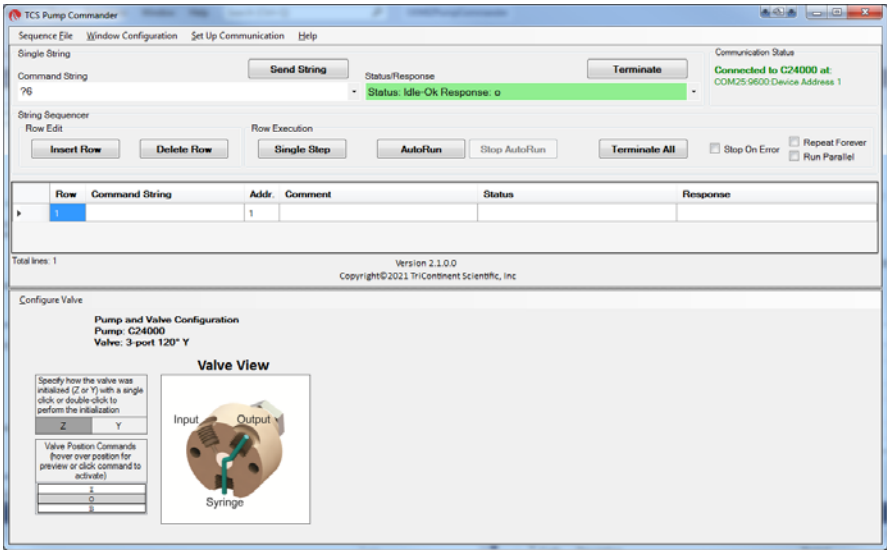

Immediate Command Tool (any device)

The Immediate Command Tool allows commands to be sent to a device without polling for command completion. On-the-fly commands can be sent from this window while the main window is waiting for a move command to complete. Immediate commands include status queries and velocity commands.

An exportable history list in this window records commands sent and pump acknowledgments.

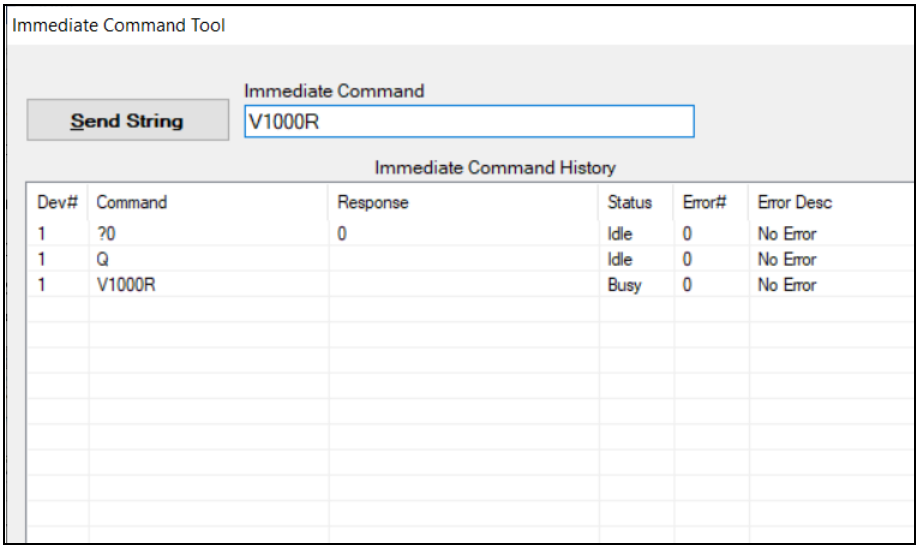

Evaluation cables and accessories

This section identifies the cables and accessories needed for evaluating the Tricontinent Air-Z Premier and Flex pump products. Several scenarios are described.

Obtaining needed items. Items listed here can be obtained through Customer Service or as otherwise described. Refer to Customer support (page 131).

GUI interface. For the best evaluation experience when communicating through RS232 or USB/RS485, use TCS Pump Commander. TCS Pump Commander is user-friendly and easy to set up to get going quickly. It does not require the user to write any protocol software.

Alternatively, terminal emulator programs such as PuTTY or RealTerm may be used to send commands in DT protocol.

Note: Very early versions of Commander may not support the CAN bus interface. The most current version should be used. Likewise, the firmware in the pumps to be attached should be updated to the most recent version.

USB Driver. The USB/RS485 interface requires a USB driver, which may be obtained at:

https://www.silabs.com/developers/usb-to-uart-bridge-vcp-drivers

If more detail is desired, refer to "Download and install driver for USB/RS485 if needed" (page 18).

The CAN bus interface hardware comes with its own USB driver.

⚠CAUTION

CAUTION: Observe the following to avoid damage to the equipment, including the tip adapter:

- Always use proper ESD practices when handling these products.
- Keep power OFF while connections are being made.

General-purpose evaluation cable

A general-purpose evaluation cable set (10388) is available for the Air-Z Premier pump. See Figure 9-2. This cable set provides unterminated flying leads to allow users to more easily wire their own evaluation cables for their interface equipment. For pinout, see the installation instructions in this manual.

Cable set 10388 is for the Air-Z Premier. It consists of a 10-position flex cable, interface PCBA, and 10-position connector with 18" flying leads for the pump interface.

The user is responsible for providing a 24V 500 mA power supply and the interface signals to be used with the pump.

Figure 9-2. General-purpose evaluation cable

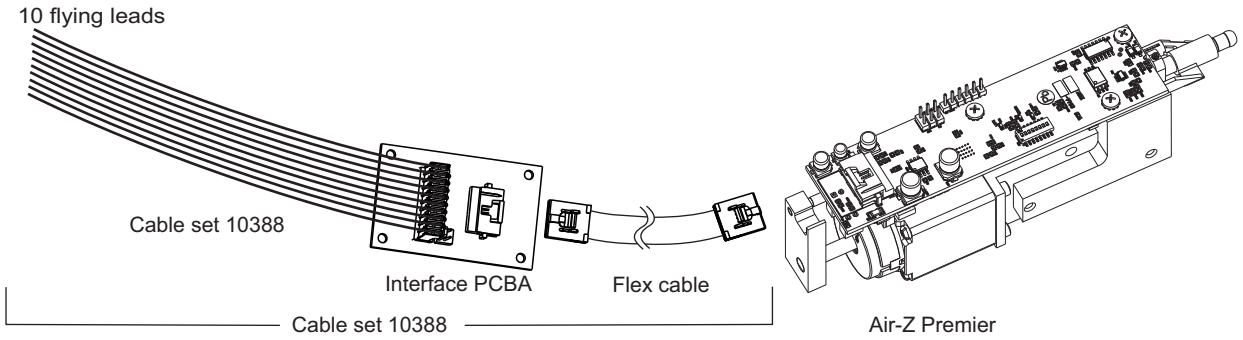

⚠CAUTION

CAUTION: To avoid damaging the equipment, ensure that power is OFF when making connections.

RS232 evaluation

Items needed

- Evaluation cable set 10389, which consists of a 10-position flex cable, interface PCBA, and cable assembly for connection to RS232, RS485/USB, and CAN bus/USB
- Bench-top power supply, 24V 500 mA (user provided)
- TCS Pump Commander or terminal emulator program (obtain as described at the beginning of this section)

Figure 9-3. RS232 evaluation hookup

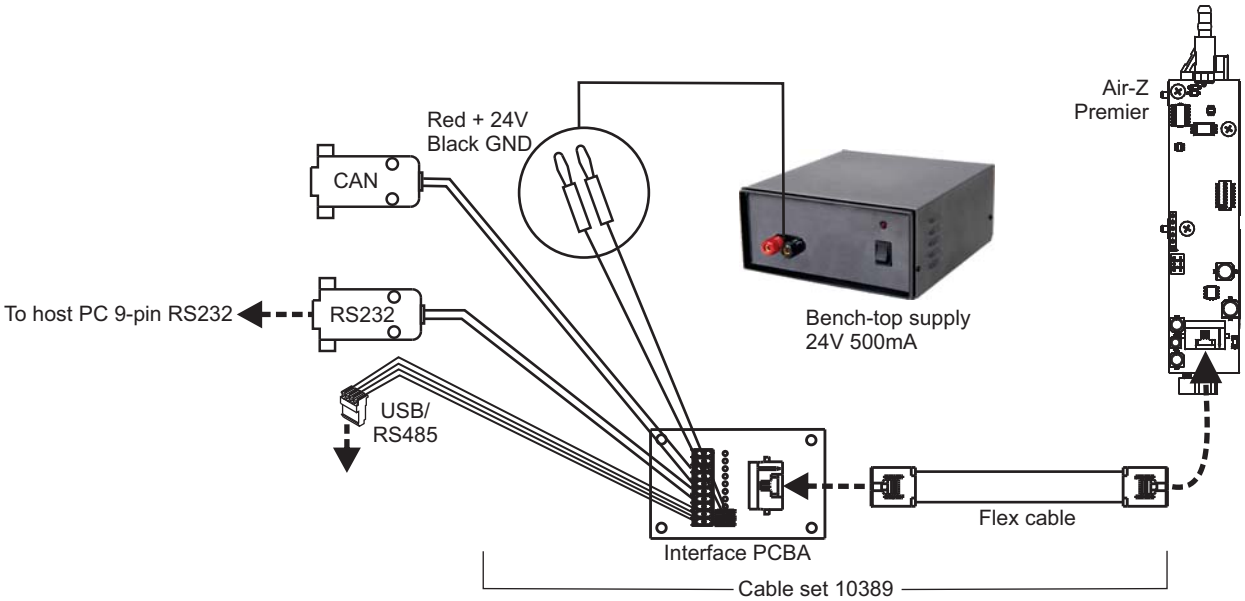

Instructions

1. Start with power OFF to avoid damaging the equipment while connections are being made.
2. Connect the pump to one end of the flex cable included with evaluation cable set 10389 as indicated by dashed lines/arrows in illustration above. Connect the interface PCBA to the other end of the flex cable as shown.
3. Connect the power plugs of evaluation cable set 10389 to the bench-top supply. Red is for +24V; black is for ground.
4. Connect the RS232 9-pin connector to the host PC.
5. Install TCS Pump Commander or terminal emulator on the host PC.
6. Apply power and confirm communication with the pump.

USB/RS485 evaluation

Items needed

- Evaluation cable set 10389, which consists of a 10-position flex cable, interface PCBA, and cable assembly for connection to RS232, RS485/USB and CAN bus/USB.
- USB/RS485 converter kit 0960
- USB A/B cable 8698-03 (order as needed, approx. 6′ 6″ length)
- Bench-top power supply, 24V 500 mA (user provided)
- USB driver for host PC (download as described at beginning of this section)
- TCS Pump Commander or terminal emulator program (obtain as described at beginning of this section)

Figure 9-4. USB/RS485 evaluation hookup

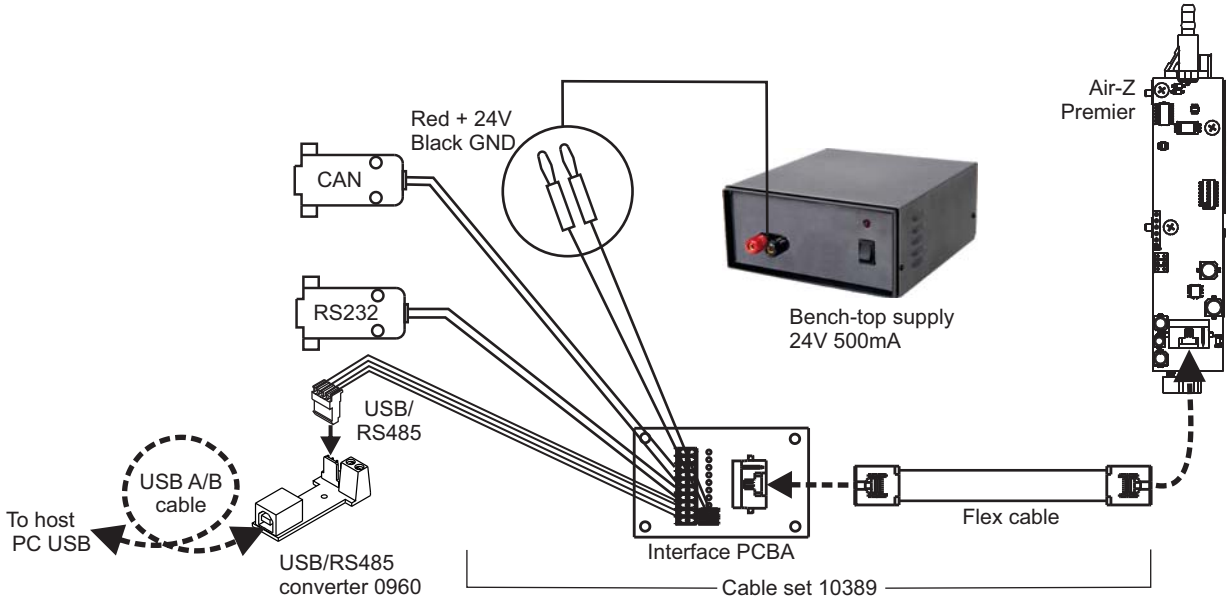

Instructions

1. Start with power OFF to avoid damaging the equipment while connections are being made.
2. Unplug and discard the 4-conductor ribbon cable assembly from USB/RS485 converter kit 0960. This uncovers a 4-pin header.
3. Plug the 4-position connector on evaluation cable set 10389 into the 4-pin header.
4. Connect the pump to one end of the flex cable included with the evaluation cable set, as indicated by dashed lines/arrows in Figure 9-4. Connect the interface PCBA to the other end of the flex cable as shown.
5. Connect the power plugs of the evaluation cable set to the bench-top supply. Red is for +24V; black is for ground.
6. Install the USB driver and TCS Pump Commander or terminal emulator program on the host PC.
7. Apply power, and confirm communication with the pump.

CAN bus evaluation (Air-Z Flex with full electronics)

Items needed

- Evaluation cable set 10389, which consists of a 10-position flex cable, interface PCBA, and cable assembly for connection to RS232, RS485/USB and CAN bus/USB.
- USB/CAN bus converter kit 0963; (optional) USB/RS485 converter kit 0960
- USB driver for host PC (included with USB/CAN bus converter)
- Bench-top power supply, 24V 500 mA (user provided)
- TCS Pump Commander (latest version available from Customer Service).

Figure 9-5. CAN bus evaluation hookup

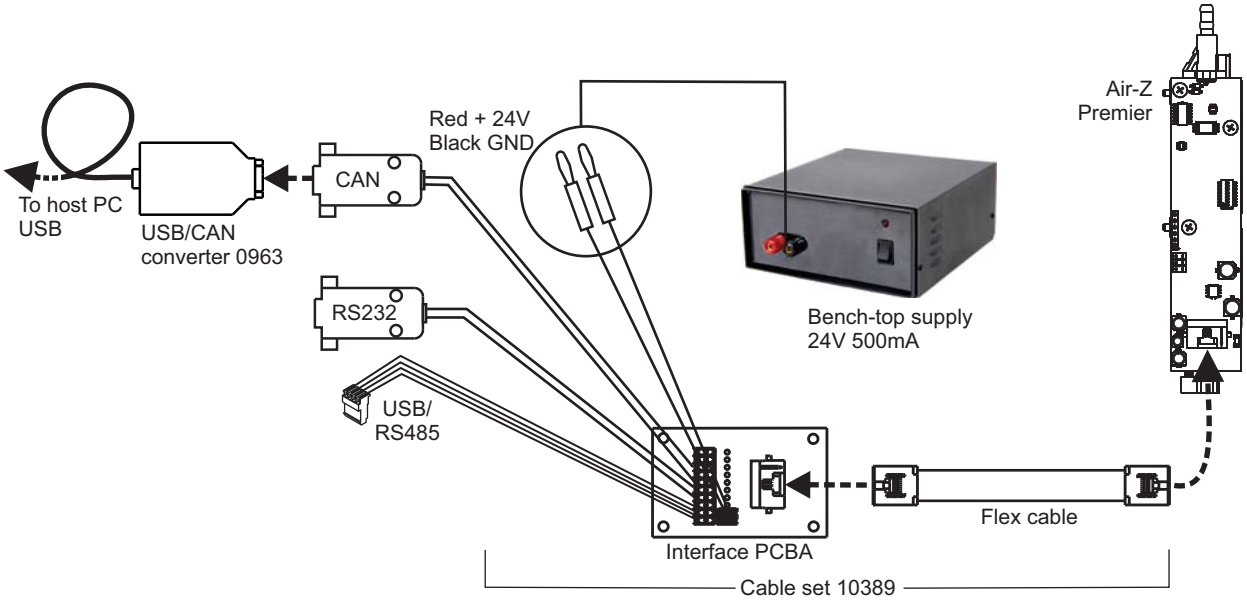

Instructions

1. Start with power OFF to avoid damaging the equipment while connections are being made.
2. Connect the pump to one end of the flex cable included with evaluation cable set 10389, as indicated by dashed lines/arrows in Figure 9-5. Connect the interface PCBA to the other end of the flex cable as shown.
3. Install the USB driver provided with the USB/CAN bus converter, using the included instructions.
4. Connect the USB/CAN bus converter to evaluation cable set 10389, and the attached cable to a USB port on the host PC.
5. Connect power plugs of evaluation cable set 10389 to the bench-top supply. Red is for +24V; black is for ground.
6. Apply power, and confirm communication with the pump.

CAN bus data streaming example with serial control

The option exists to stream pressure data from the pump. The optimum method for streaming is to use the CAN bus interface due to its higher data rate. In the application described here, the pump is controlled through either RS232 or RS485/USB.

Note: Beginning with firmware version 10, the pump can simultaneously stream data and accept commands over the CAN bus.

Items needed

- Evaluation cable set 10389, which consists of a 10-position flex cable, interface PCBA, and cable assembly for connection to RS232, RS485/USB
- USB/CAN bus converter kit 0963; USB/RS485 converter 0960
- USB driver for host PC (included with USB/CAN bus converter)
- Bench-top power supply, 24V 500 mA (user provided)
- TCS Pump Commander (latest version available from Customer Service).

Figure 9-6. CAN bus for data streaming hookup

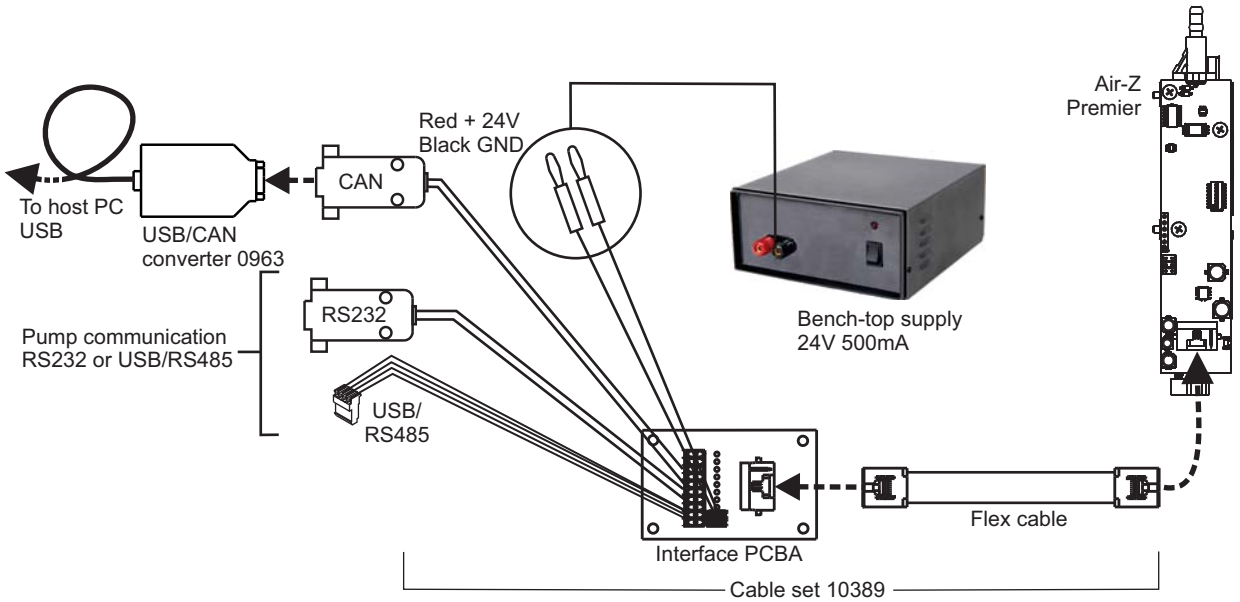

Instructions

1. Start with power OFF to avoid damaging the equipment while connections are being made.
2. Install the USB driver provided with the USB/CAN bus converter according to the included instructions.
3. Connect the USB/CAN bus converter to evaluation cable set 10389, and the attached cable to a USB port on the host PC, as shown in Figure 9-6.
4. Set switch 8 of DIP switch array SW1 to allow streaming as described in the Installation instructions of this manual.

5. Install RS232 or USB/RS485 communications interface as described on pages 168 or 169.

6. Ensure CAN streaming has been enabled by issuing the [U4] command.

Note: Contact pins and pre-assembled cable/connector assemblies may be available through the manufacturer and/or distributors.

⚠CAUTION

CAUTION: Take care when making connections to input and output pins, to avoid electrical damage to equipment. Power must be off. Contact Customer Service with any further questions.

10 Revision history

Revision history table

Revision information for this manual is shown in the following table.

Table 10-1: Revision History

Date	Revision Level	Description
4/4/2017	A	First release
5/2/2018	B	Various corrections, clarifications, and updates; addition of temperature compensation, evaluation cable information, and disposable tip insertion force and speed. Added information concerning CAN-compatible version of TCS Pump Commander.
4/8/2020	C	Previous version incorporated and information expanded to form a full product manual. Corrections made as needed. Latest firmware changes (through 5/30/2019) included.
8/20/2021	D	Brought instructions up to date with V13 firmware (3/14/2020). Changed instructions where procedures interface with new version of Commander (TCS Pump Commander).
6/12/2023	E	Added mounting plate guidance in installation chapter and applied changes for consistency with Air-Z Flex customer manual. Changed [t] command values in example strings.
5/20/2026	F	Changes to u1_x, u16_x and u36_x, and added u23_x. Minor other changes. This revision is consistent with V14 firmware (date 11/11/21).

Contacts

TRICONTINENT
An Ingersoll Rand Business

tricontinent.com

Americas

Tricontinent
Scientific, Inc.

12740 Earhart Ave.
Auburn, CA 95602
USA
Tel: +1 800 937 4738, or +1 530 273 8888
liquidhandling.tcs@irco.com

Asia Pacific

Gardner Denver Thomas Pneumatic Systems (Wuxi), Co., Ltd.

No. 1 New Dong An Road
Shuofang Town
Wuxi, Xinwu District
Jiangsu 214142 China
Tel: +86 510 6878 2258
tricontinent.cn@irco.com

EMEA

(Headquarters
Gardner Denver Thomas GmbH)

Livry-Gargan-Str. 10
82256 Fürstenfeldbruck
Germany
Tel: +49 8141 2280 0
thomas.de@irco.com

The information presented in this material is based on technical data and test results of nominal units. It is believed to be accurate and reliable and is offered as an aid to help in the selection of Tricontinent products. It is the responsibility of the user to determine the suitability of the product for the intended use and the user assumes all risk and liability in connection there with. Tricontinent does not warrant, guarantee or assume any obligation or liability in connection with this information.

Printed in USA. PUB 8694-26 F 05/2026

© Tricontinent Scientific, Inc. All rights reserved.