RT Series Datasheet

Peristaltic Metering Pump

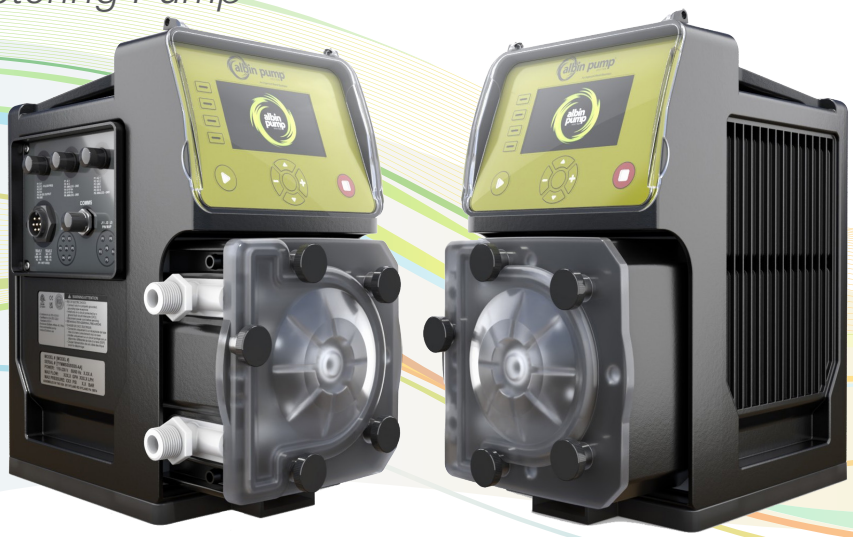

The RT Series peristaltic metering pump from Albin Pump is an advanced chemical metering pump for use in water and general industrial applications for delivering controlled and accurate dosing of chemicals.

The RT Series includes as standard all advanced controls for SCADA and digital integration and these key features:

- ✓ Patented offset rotor technology for simple and safe tube changes
- ✓ IP66 rated USB-C Port for simple upload of pump firmware versions and downloading or timed collection of pump operating data
- ✓ Universal power supply rated from 100-240V at 50/60 hz and up to 6 power cord options for global use
- ✓ FluxDrive™ motor technology for maximum control and turndown and a linear torque curve which delivers full torque even at lowest speed and maximum duty point
- ✓ An all new design sealed pump head with integrated optical leak detection sensor and chemical containment and drain options
- ✓ Sealed and serviceable pump head which does not require replacement of the entire pump cartridge, minimizing both the environmental impact and operation costs
- ✓ Integrated cover safety sensor ensuring operator safety when performing routine maintenance
- ✓ IP66 / NEMA 4X rated enclosure for continuous indoor and outdoor use with all chemically resistant materials and UV protection for continued, long term durability and performance
- ✓ Integrated removable base with universal bolting pattern for easy retrofit, simplified installation, and toolless removal of unit for servicing

RT Series

Data Sheet

RT Series Overview

Pump Model	Control Code	Flow (GPH/LPH)	Pressure (PSI/Bar)	Materials
RT2	RT2X1 - Advanced	8.75 / 33.1	100 / 6.9	PVDF Connections with 3 available tube materials: XL - Extended Life CR - Chemical Resistant PT - Petro Tough
RT3	RT3X1 - Advanced	17.5 / 66.2	100 / 6.9	
RT4	RT4X1 - Advanced	36.0 / 136	60 / 4.1	

Advanced controls includes complete Inputs/Outputs for SCADA integration + MODBUS RTU

- 4 Dry Contact Digital Inputs
- 2 Form-C Relay Outputs
- 2 Open Collector Outputs
- 2 Analog 4-20mA Outputs
- 2 Analog 4-20mA Inputs
- 0-10VDC Inputs
- Frequency PWM Input
- RS485 Connection for Modbus RTU
- USB-C Drive Interface

All advanced pumps available with optional control module for Profibus, MODBUS TCP, and Ethernet IP

General Specification RT Series metering Pump

Ingress protection	IP66 / NEMA 4X
Voltage / Frequency	100/240 VAC, 50/60 Hz
Amperage	0.8A @ 120V, 0.4A @ 240V
Operation environment	Indoor / Outdoor
Process fluid temperature	-10°C to +45°C (14F to 113F)
Operating ambient temperature	-10°C to +50°C (14F to 122F)
Storage temperature	-40°C to +70°C (-40F to 158F)
Operating humidity range:	0-95% RH (non-condensing)
Repeatability / Accuracy	± 0.5% / ± 1.0%
Max Suction Lift	30 ft / 9.1m
Connections	½" NPT/BSP Suction and Discharge

CERTIFICATIONS:

©2025 Albin Pump Lit# IRITS-1125-001 EN Rev. 09.26

RT Series

Data Sheet

RT Series Model Code

Model RT Series	
RT2	RT2 Drive Assembly 8.75 GPH 100 psi (33.1 LPH 6.9 bar)
RT3	RT3 Drive Assembly 17.5 GPH 100 psi (66.2 LPH 6.9 bar)
RT4	RT4 Drive Assembly 36.0 GPH 60 psi (136 LPH 4.1 bar)

Power Cord Plug	
1	110V USA
2	220V USA
3	220V DIN
5	220V UK
6	220V Australia / New Zealand
7	220V Swiss

Control Code	
1	Advanced SCADA with MODBUS RTU

Tube Selection*		
2XL	XL Tube	RT2
2CR	CR Tube	
2PT	PT Tube	
2XL	XL Tube	RT3
2CR	CR Tube	
2PT	PT Tube	
2XL	XL Tube	RT4
2CR	CR Tube	
2PT	PT Tube	

Tube Size (ID of tubing)	
05	*RT2 8.75 GPH (33.1 LPH)
06	RT3 17.5 GPH (66.2 LPH)
10	RT4 36 GPH (136 LPH)

Pump Head Orientation	
L	Port Left
R	Port Right

RT2 1 1 - 2XL 05 L Sample Model Number

* RT2 Pumps with 2PT tubes use the "06" tube ID
**All tube assemblies include PVDF suction and discharge connection of 1/2" NPT/BSP

All pumps include in the box:
- Connection kit with 1/2" nuts and 3/8" furrules
- Interconnecting tubing
- One 49035 6-Pin Cable
- One spare tube assembly
- Drain line tubing

©2025 Albin Pump Lit# IRITS-1125-001 EN Rev. 11.26

RT Series

Data Sheet

Spare Parts & Accessories

RT Optional Accessories	
49035	J1-J3 M12 6 Pin Connection Cable 6ft
RSP90075	J4 M12 6 Pin Connection Cable - Outputs - 6ft
55199	COMMs Data Cable
RSA90044	Communications Box - MODBUS TCP
RSA90043	Communications Box - Profibus
RSA90045	Communications Box - Ethernet IP
RSA90034	Quick Disconnect Fitting 3/8" FKM
RSA90033	Barbed Connection Fittings
RSA90035	Quick Disconnect Fitting 3/8" EPDM

RT Spare Parts	
RT-R-X	RT Universal Rotor Assembly
RSP90022	RT Replacement Cover Assembly
RSP90004	RT Replacement Baseplate
RT2-2XL05	Tube Assembly RT2 XL
RT2-2CR5	Tube Assembly RT2 CR
RT23-2PT06	Tube Assembly RT2 and RT3 PT
RT3-2XL06	Tube Assembly RT3 XL
RT3-2CR06	Tube Assembly RT3 CR
RT4-2XL10	Tube Assembly RT4 XL
RT4-2CR10	Tube Assembly RT4 CR
RT4-2PT10	Tube Assembly RT4 PT

Albin XL - **Extended Life** tubing has excellent acid and alkali resistance, and is compatible with numerous oxidizing agents such as sodium hypochlorite. Albin XL is best for fatigue life and is the longest-lasting tube in compatible applications. Min/max temperature: 0-80°C (32-176°F)

Albin CR - **Chemical Resistant** is suited for handling strong acids and bases, and is virtually unaffected by most commercial sanitizers & cleaners. Min/max temperature: 0-54°C (32-130°F)

Albin PT - **Petro-Tough** can be used with fats and oils, lubricants, and some solvents.
Min/max temperature: 0-54°C (32-130°F)

©2025 Albin Pump Lit# IRITS-1125-001 EN Rev. 11.26

RT Series

Data Sheet

Dimensional Drawing

mm [inch]

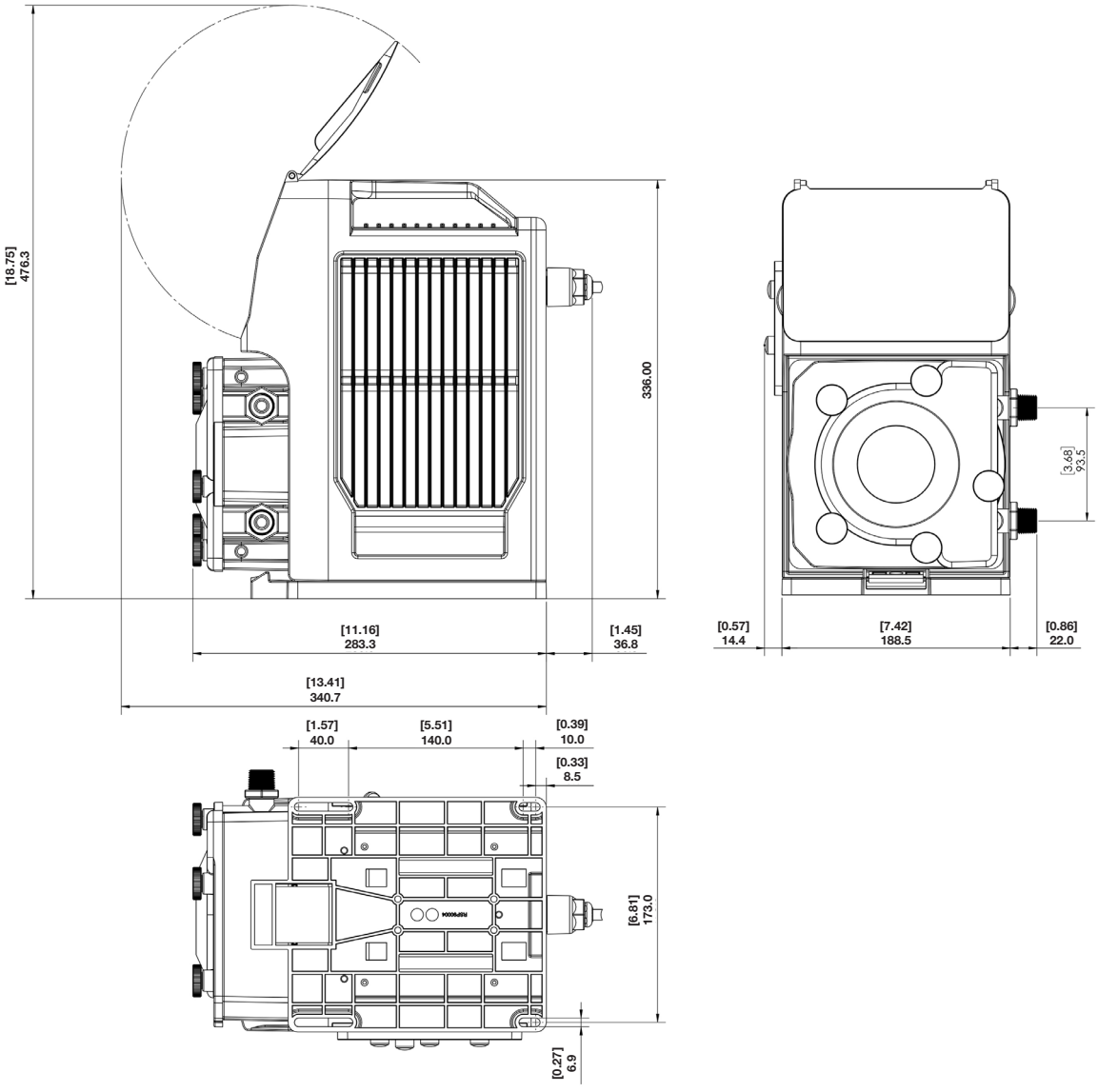

About Ingersoll Rand Inc.

Ingersoll Rand Inc. (NYSE:IR), driven by an entrepreneurial spirit and ownership mindset, is dedicated to helping make life better for our employees, customers and communities. Customers lean on us for our technology-driven excellence in mission-critical flow creation and industrial solutions across 40+ respected brands where our products and services excel in the most complex and harsh conditions. Our employees develop customers for life through their daily commitment to expertise, productivity and efficiency. For more information, visit www.IRCO.com.

www.albinpump.com
©2025 Albin Pump Lit# IRITS-1125-001 EN Rev. 09.26
All Rights Reserved. Picture for illustration purposes only.
We reserve the right to modify the characteristics of our products without prior notice