RELEASED

Form P6877
Edition 6
June 2012
CCN: 03536968

MULTI–VANE® Air Motors

M007 Series

Operation and Maintenance Information

EN Operation and Maintenance Information
ZH 操作和维护信息

Save These Instructions

Ingersoll Rand

RELEASED

EN

WARNING

General Product Safety Information

- **Read and understand this manual before operating this product.**
- **It is your responsibility to make this safety information available to others that will operate this product.**
- **Failure to observe the following warnings could result in injury.**

WARNING

- Always operate, inspect and maintain this motor in accordance with American National Standards Institute Safety Code for Portable Air Tools (ANSI B186.1).
- For safety, top performance and maximum durability of parts, operate this motor at 90 psig (6.2 bar/620 kPa) air pressure at the inlet with 5/16" (8 mm) air supply hose.
- Always turn off the air supply and disconnect the air supply hose before installing, removing or adjusting any accessory on this motor or before performing any maintenance on this motor.
- Do not use damaged, frayed or deteriorated air hoses and fittings.
- Keep hands, loose clothing and long hair away from rotating end of motor.
- Anticipate and be alert for sudden changes in motion during start up and operation of any motor.
- Motor shaft may continue to rotate briefly after throttle is released.
- Do not lubricate motor with flammable or volatile liquids such as kerosene, diesel or jet fuel.
- Do not remove any labels. Replace any damaged label.
- Use accessories recommended by **Ingersoll Rand**.
- This motor is not designed for working in explosive atmospheres.
- This motor is not insulated against electric shock.

NOTICE

- The use of other than genuine **Ingersoll Rand** replacement parts may result in safety hazards, decreased Motor performance and increased maintenance, and may invalidate all warranties.
- **Ingersoll Rand** is not responsible for customer modification of motors for applications on which **Ingersoll Rand** was not consulted.
- Repairs should be made only by authorized, trained personnel. Consult your nearest **Ingersoll Rand** Authorized Servicenter.
- It is the responsibility of the employer to place the information in this manual into the hands of the operator.

Safety Symbol Identification

Wear Respiratory Protection

Wear Eye Protection

Wear Hearing Protection

Read Manuals Before Operating Product

(Dwg. MHP2598)

Safety Information - Explanation of Safety Signal Words

DANGER	Indicates an imminently hazardous situation which, if not avoided, will result in death or serious injury.
WARNING	Indicates a potentially hazardous situation which, if not avoided, could result in death or serious injury.
CAUTION	Indicates a potentially hazardous situation which, if not avoided, may result in minor or moderate injury or property damage.
NOTICE	Indicates information or a company policy that relates directly or indirectly to the safety of personnel or protection of property.

Lubrication

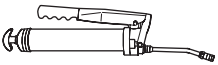

Ingersoll Rand No. 28 Lubricant.

Ingersoll Rand No.10 Lubricant.

We recommend the use of an air line lubricator in the air supply line. Attach the unit as close to the motor as practical. We recommend using an **Ingersoll Rand** No. C28221-800 Filter-Regulator-Lubricator Unit. After each forty hours of operation, or as experience indicates, remove the Gear Case Grease Screw (23) and inject 1.5 cc of the recommended grease into the opening. Do not grease excessively. Too much grease in the Gear Case (16) will cause heating. Grease leakage from the spindle end is also an indication that an excessive amount of grease has accumulated within the Gear Case.

Whenever the gear end of the Motor is disassembled, lubricate the gear train as follows:

For Gear ratio 000:1, work approximately 13 cc of the recommended grease into and around the Spindle Bearing (26).

For gear ratios 004:1, 006:1 or 009:1, work approximately 26 cc of the recommended grease into the gearing and around the Planet Gear Bearings (20) and Spindle Bearings (26).

For gear ratios 012:1, 015:1, 021:1, 027:1, 037:1, 044:1, 063:1 and 086:1, work approximately 34 cc of the recommended grease into the gearing and around the Planet Gear Bearings (20) and (49) and Spindle Bearings (26).

For gear ratios 063:1, 086:1, 119:1, 151:1, 188:1, 275:1 and 374:1, work approximately 45 cc of the recommended grease into the gearing and around the Planet Gear Bearings (20), (42) and (38) and Spindle Bearings (26), (34) and (35).

For continuous operation:

Continuous operation of geared motors generates heat which can cause grease to dry out and cake. The addition of fresh grease temporarily rectifies this problem. However, a small amount of oil should be added to the grease to replace the oil which was lost during continuous operation. The oil creates a slurry which makes the grease less likely to dry out and cake. **After each eight hours of continuous operation or as experience indicates**, add ten drops of the recommended oil to the opening of each grease screw or grease fitting.

NOTICE

The use of other than genuine Ingersoll Rand replacement parts may result in decreased tool performance and increased maintenance, and may invalidate all warranties.

Operation

For optimum performance, the air source and supply lines must be capable of maintaining 90 psig (6.2 bar/620 kPa) air pressure at the Motor. 3/8" (9.5 mm) diameter or larger hose is necessary for ample air flow to each Motor.

Reversible Motors require the use of a 4–way valve, or two 3–way valves in the supply line because the reverse air inlet port becomes an auxiliary port when the Motor operates in forward rotation. In reverse, the forward inlet becomes the auxiliary exhaust port.

An example of each method is diagrammed in the following illustration.

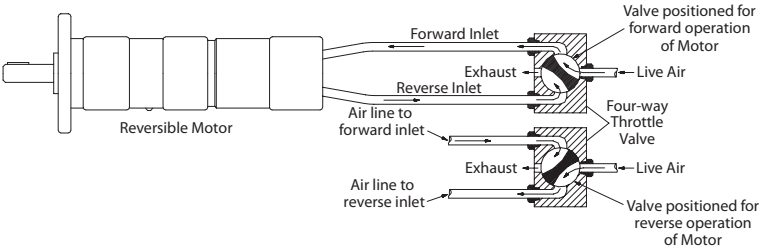

Single Four Way Valve for controlling Forward and Reverse operation of Motor

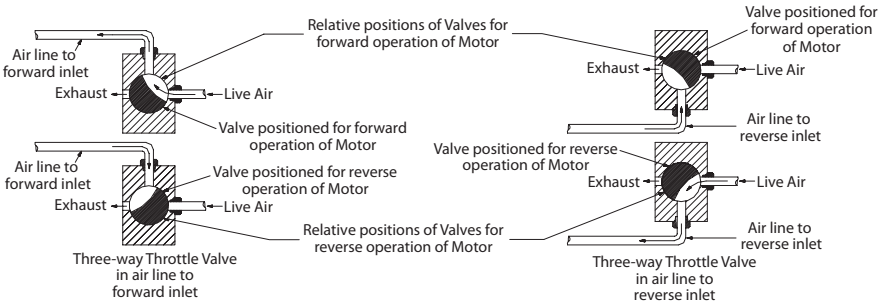

Two Three Way Valve for controlling Forward and Reverse operation of Motor

(Dwg. TPB854)

RELEASED

EN

Model Number Code for M007 Stationary Air Motor

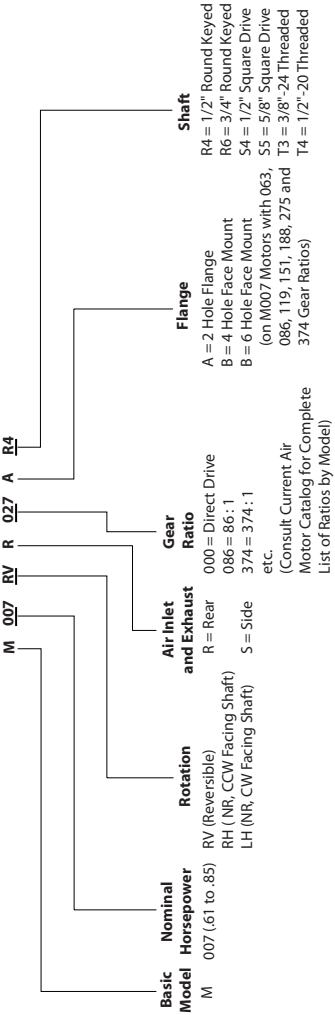

(Dwg. TPD1207)

Parts and Maintenance

When the life of the motor has expired, it is recommended that the motor be disassembled, degreased and parts be separated by material so that they can be recycled.

Manuals can be downloaded from www.ingersollrandproducts.com

Refer all communications to the nearest **Ingersoll Rand** Office or Distributor.

警　告

通用产品安全信息

- **使用产品前请阅读并理解本手册。**
- **您有责任为其他操作该产品的人员提供本安全手册。**
- **不按照以下警告进行操作将可能导致人员受伤。**

警　告

- 请始终按照美国国家标准协会移动式空气工具安全标准 (ANSI B186.1) 使用、检查和维护该电机。
- 为确保使用安全、最佳性能、零部件的最长使用寿命，电机使用气压为 90 psig（6.2 bar/620kPa），气源软管规格为 5/16”（8mm）。
- 请务必在安装、移动或更换电机部件、或进行任何维修之前关闭并切断气源。
- 切勿使用已损坏、磨损或老化的空气软管及其它连接装置。
- 禁止手、散布、长发人员靠近电机旋转端。
- 请留心和注意电机启动和旋转过程中出现的运转异常变化。
- 气阀松开后电机轴仍会旋转。
- 请勿使用易燃易爆液体如煤油、柴油或喷气机燃料作为润滑油。
- 请勿撕掉任何标签。 请更换任何受损的标签。
- 使用 **Ingersoll Rand** 推荐配件。
- 该电机的设计决定了其不适用于爆炸性气体。
- 该电机没有防电击功能。

注　意

- 除 **Ingersoll Rand** 原装更换部件外，更换其它部件可能会导致安全危险、设备电机降低、维护工作增加，而且可能导致所有保修失效。
- 用户若没有咨询 **Ingersoll Rand** 而擅自根据使用场合对工具进行改动，**Ingersoll Rand** 将不对其产生的后果负任何责任。
- 维修须由授权并经过培训的专业人员进行。 咨询您最近的 **Ingersoll Rand** 授权维修中心。
- 雇主应将本手册相关信息准确传达给操作人员。

安全标识识别。

戴呼吸保护器
保护。

戴眼镜
保护。

戴听力保护器
保护。

先阅读手册
操作产品

（图 MHP2598）

安全信息：安全信号文字解释

危　险 表示如果不避免，可能出现紧急危险情况导致死亡或重伤。

警　告 表示如果不避免，可能出现紧急危险情况，可能导致死亡或重伤。

小　心 表示如果不避免，可能出现紧急危险情况，可能导致人员轻度或重度受伤或财产损失。

注　意 表示直接或间接与人身安全和财产保护有关的信息或公司政策。

ZH

润滑油

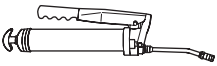

Ingersoll Rand 28 号润滑油。

Ingersoll Rand 10 号润滑油。

我们建议在供气管线中使用气管润滑剂。 请根据实际情况尽量靠近电机安装润滑器。 我们建议使用 **Ingersoll Rand** 部件号 C28221-800 过滤器-调节器-润滑器装置。每工作 40 小时后，或根据经验判断需要时，请卸下齿轮箱润滑油螺钉 (23)，在开口中注入 1.5 毫升的推荐油脂。 切勿润滑过度。 齿轮箱 (16) 中油脂太多可能导致过热。

如果轴端有油脂渗出，也表示齿轮箱内的油脂过多。拆卸电机齿轮端时，必须按照以下说明对齿轮链进行润滑：

对于传动比 000:1，在主轴承 (26) 内及周围注入大约 13 毫升的推荐油品。

对于传动比 004:1、006:1 或 009:1、在行星齿轮轴承 (20) 和主轴承 (26) 内及周围注入大约 26 毫升的推荐油品。

对于传动比 012:1、015:1、021:1、027:1、037:1、044:1、063:1 和 086:1，在行星齿轮轴承 (20) 和 (49) 以及主轴承 (26) 内及周围注入大约 34 毫升的推荐油品。

对于传动比 063:1、086:1, 119:1、151:1、188:1、275:1 和 374:1，在行星齿轮轴承 (20)、(42) 和 (38) 以及主轴承 (26)、(34) 和 (35) 内及周围注入大约 45 毫升的推荐油品。

对于连续运转：

齿轮电机的连续运转会产生热量，导致油脂变干和结块。 临时添加新油脂可解决这个问题。 但是，应在油脂中添加少量的润滑油，以补充连续运转过程中损失的润滑油。 润滑油可与油脂混合，缓解其变干结块的问题。 连续运转 8 小时后或根据经验判断需要时，请在每个油脂螺钉或油脂装置的开口中注入 10 滴推荐润滑油。

注　意

使用非 Ingersoll Rand 原装更换部件可能会导致工具性能降低和维护工作增加，而且可能导致所有保修失效。

操作

要获得最佳的性能，气源和供气管线必须能够保持电机处 90 psig（6.2 bar/620 kPa）的气压： 必需 3/8”（9.5 mm）或更大直径的软管才能保证每个电机具有充足的气流：

可逆电机需要在供气管线中使用一个 4 通阀门或两个 3 通阀门，因为电机正向旋转工作时，逆向进气口将成为辅助端口。 逆向工作时，正向进气口将成为辅助出气口。

下图详细描述了每种方法的工作方式。

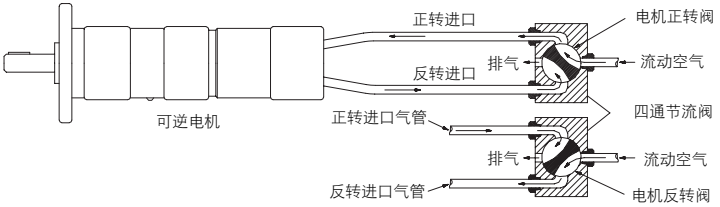

一个控制电机正转和反转的四通阀

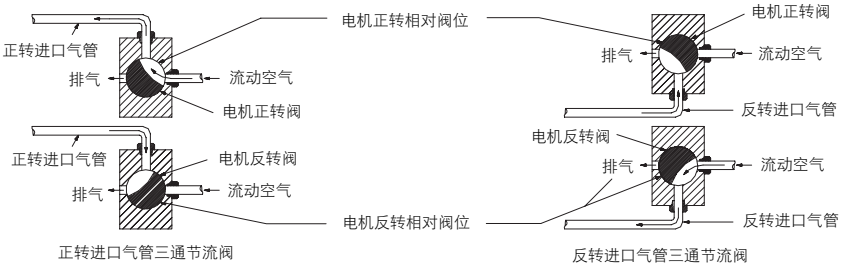

两个控制电机正转和反转的三通阀

（图 TPB854）

M007 固定型空气电机的型号代码

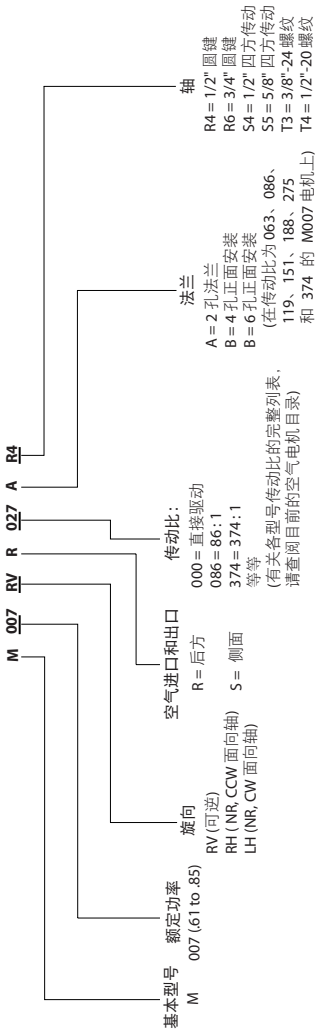

（图 TPD1207）

部件和维护

电机寿命到期后，建议将其拆卸并除去所有油脂，将部件按材料归类，以便回收利用。

手册可从 www.ingersollrandproducts.com 下载。

如有任何事宜，请垂询就近的 **Ingersoll Rand** 办事处或经销商。

RELEASED

M007 Series Motor Power Unit Exploded Diagram

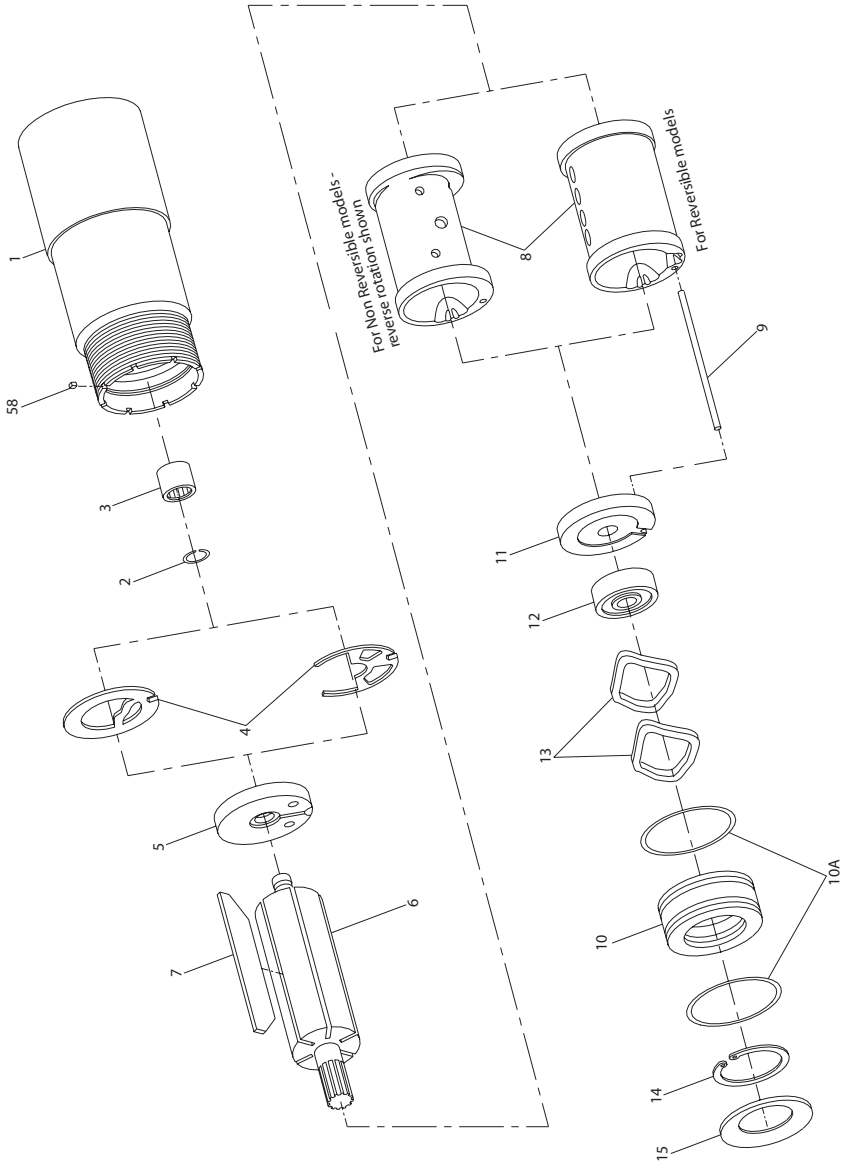

(Dwg. TPB847)

M007 Series Spindle, Gear Case and Gearing for 000, 004, 006, 009, 012, 015, 021, 027, 037 and 044 Ratios

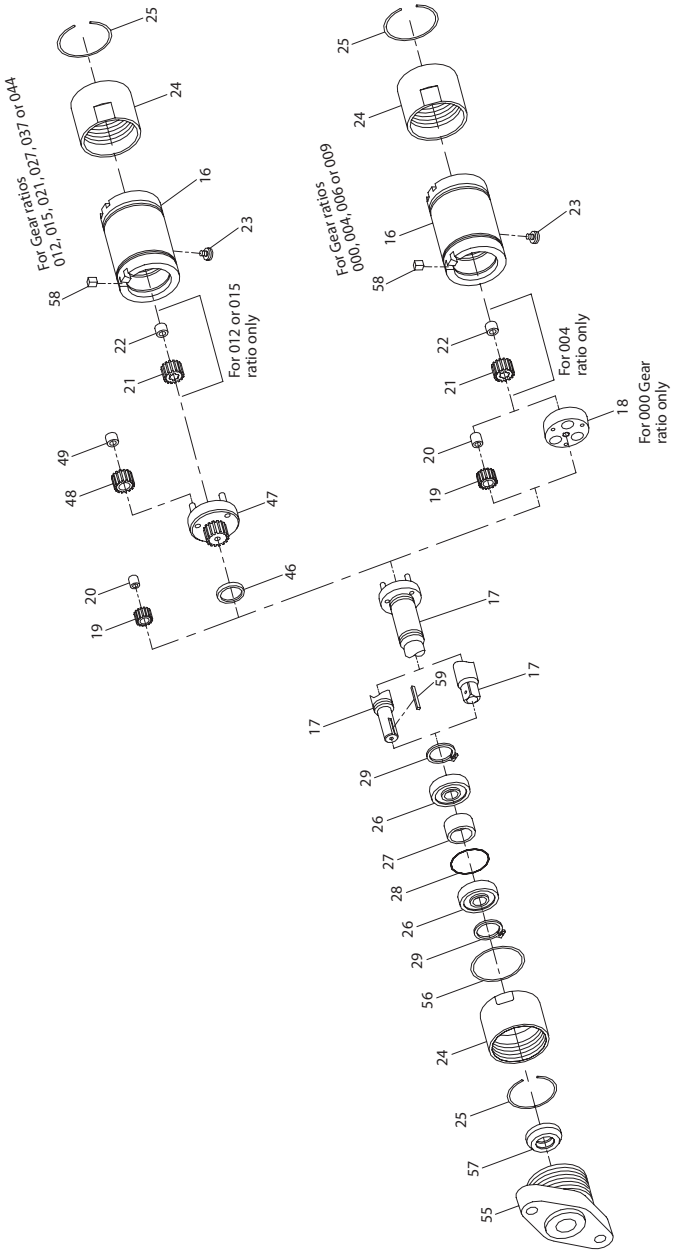

(Dwg. TPA1230)

M007 Series Spindle, Gear Case and Gearing for 063, 086, 119, 151, 188, 275 and 374 Ratios

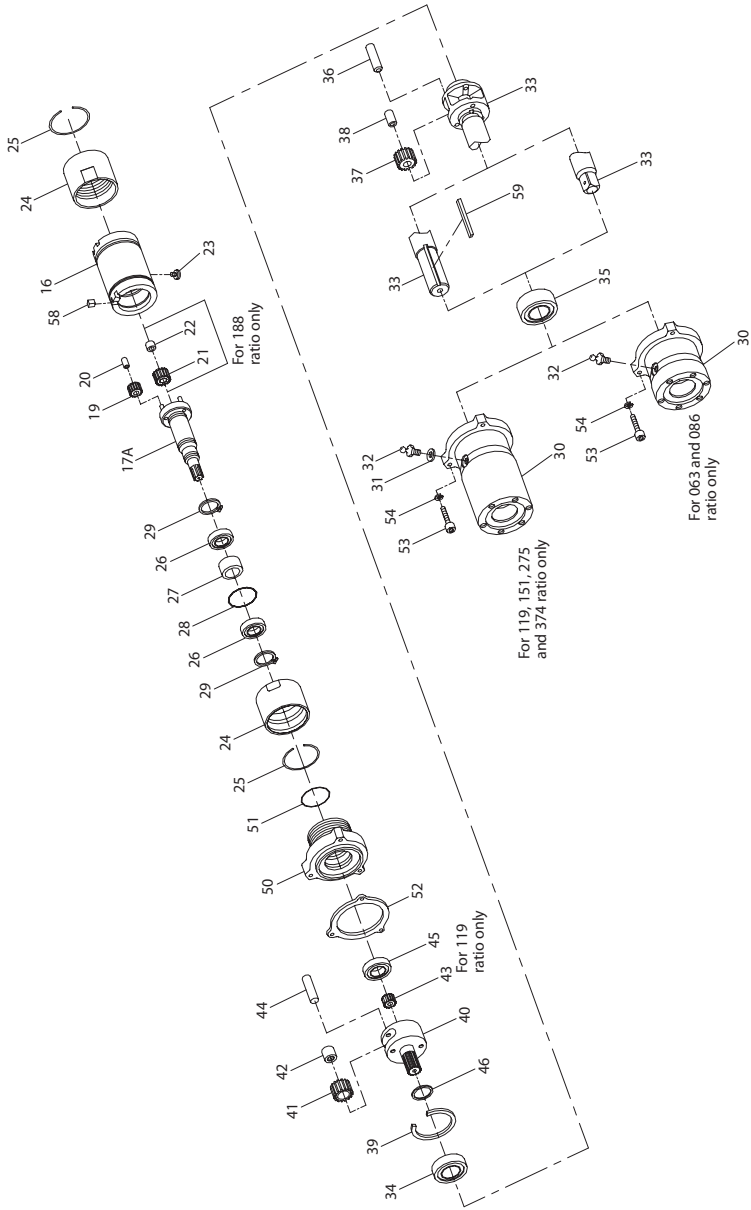

(Dwg. TPA1229-1)

RELEASED

M007 Series Parts List

Item	Part Description	Part Number
1	Motor Housing	
	for nonreversible models	M007-N40
	for reversible models	M007-R40
2	Rear End Plate Retainer	7AH-118
3	Rear Rotor Bearing	7AH-24
4	Rear End Plate Gasket	
	for nonreversible models	7AH-739
	for reversible models	7RL-739
5	Rear End Plate	M007-12
6	Rotor	
	for 006, 021, 027, 063, 119, or 275 ratios	M007-53-006
	for all other ratios	M007-53-000
7	Vane Packet (set of 5 Vanes)	7RL-42-5
8	Cylinder	
	for nonreversible models	7AH-3A
	for reversible models	M007-R3
9	Cylinder Dowel	7AH-98
10	Rotor Bearing Housing Assembly	M007-A13
10A	Rotor Bearing Housing Seal	M007-210
11	Front End Plate	M007-11
12	Front Rotor Bearing	R1-22
13	Front Rotor Bearing Spring Washer(2)	7AH-278
14	Front Rotor Bearing Retainer	W22-118
15	Motor Clamp Washer	M007-207
16	Gear Case	
	for 012, 015, 021, 027, 037 or 044 ratio	M007-137
	for 000, 004, 006, 009, 063, 086, 119, 151, 188, 275 or 374 ratio	M007-37
17	Spindle	
	Round keyed shaft	
	for 000, 004, 015, 027 or 037 ratio	M007-108-000
	for 012 or 021 ratio	M007-108-012
	for 006 ratio	M007-108-006
	for 009 ratio	M007-108-009
	for 044 ratio	M007-108-044
	Square drive shaft	
	for 000, 004, 015, 027 or 037 ratio	M007-208-000
	for 012 or 021 ratio	M007-208-012
	for 006 ratio	M007-208-006
	for 009 ratio	M007-208-009
	for 044 ratio	M007-208-044
	3/8"-24 Threaded shaft	
	for 000, 004, 015, 027 or 037 ratio	M007-8-000
	for 012 or 021 ratio	M007-8-012
	for 006 ratio	M007-8-006
	for 009 ratio	M007-8-009
	for 044 ratio	M007-8-044
	1/2"-20 Threaded shaft	
	for 000, 004, 015, 027 or 037 ratio	M007-408-000
	for 012 or 021 ratio	M007-408-012
	for 006 ratio	M007-408-006
	for 009 ratio	M007-408-009
	for 044 ratio	M007-408-044
17A	Driver	
	for 063, 119 or 275 ratio	M007-563-063
	for 086 or 374 ratio	M007-563-086
	for 151 ratio	M007-563-151
	for 188 ratio	M007-563-I88
18	Spindle Drive Plate (for 000 ratio only)	7AD-171
19	Spindle Planet Gear Assembly (3)	
	for 004, 015, 027, 037, 151 or 188 ratio	7AJ-A10
	for 006, 063, 119 or 275 ratio	7AK-A10
	for 009, 086 or 374 ratio	7AL-A10
	for 044 ratio	7AQ-A10
	for 012 or 021 ratio	M007-A10-003

Item	Part Description	Part Number
20	Planet Gear Bearing (3)	
	for 012 or 021 ratio	7AH-500
	for 004, 015, 027, 037, 044, 151 or 188 ratio	7AJ-500
	for 006, 009, 063, 086, 119, 275 or 374 ratio	7AK-500
21	Rotor Pinion	
	for 012 or 015 ratio	7AH-17
	for 004, 188 ratio or 151 ratio	7AJ-17
22	Rotor Pinion Spacer (for 004, 012, 015 or 188 ratio)	7AH-18
23	Grease Screw	M002-95
24	Coupling Nut(2)	M007-27
25	Coupling Nut Retainer (2)	M007-29
26	Spindle Bearing (2)	WFS182-97
27	Spindle Bearing Spacer	M007-111
28	Gear Case Seal	M007-210
29	Spindle and Spindle Bearing Retaining Ring (2)	R380Q-6
30	Gear Case Assembly	
	for 063 or 086 ratio	ET3802M-A37
	for 119, 151, 188, 275 or 374 ratio	ET3802P-A37
31	Grease Fitting Washer (for 119, 151, 188, 275 or 374 ratio)	R3-92A
32	Grease Fitting	
	for 063 or 086 ratio	23-188
	for 119, 151, 188, 275 or 374 ratio	R1-188
*	Spindle Assembly	
	Round keyed shaft	
	for 063 or 086 ratio	R3800M-A108
	for 119, 151, 188, 275 or 374 ratio	R3800P-A108
	Square drive shaft	
	for 063 or 086 ratio	R3800M-A8
	for 119, 151, 188, 275 or 374 ratio	R3800P-A8
33	Spindle	
	Round keyed shaft	
	for 063 or 086 ratio	R3800M-108
	for 119, 151, 188, 275 or 374 ratio	R3800P-108
	Square drive shaft	
	for 063 or 086 ratio	R3800M-8
	for 119, 151, 188, 275 or 374 ratio	R3800P-8
34	Rear Spindle Bearing	
	for 063 or 086 ratio	4E-510
	for 119, 151, 188, 275 or 374 ratio	R38P-97
35	Front Spindle Bearing	4UA9-593
36	Planet Gear Shaft	
	for 063 or 086 ratio (2)	8U-191
	for 119, 151, 188, 275 or 374 ratio (3)	R38P-190
37	Planet Gear Assembly	
	for 063 or 086 ratio (2)	4E-10A
	for 119, 151, 188, 275 or 374 ratio (3)	R38P-9
38	Planet Gear Bearing	
	for 063 or 086 ratio (2)	8U-654
	for 119, 151, 188, 275 or 374 ratio (3)	R38P-500
39	Spindle Retainer (for 119, 151, 188, 275 or 374 ratio)	FMC2-280
	Gear Head Assembly	
	for 119 ratio	R38P-A216
	for 188, 275 or 374 ratio	R380S-A2I6
40	Gear Head	
	for 119 ratio (3)	R38P-216
	for 151 ratio (2)	R3800R2-216
	for 188, 275 or 374 ratio	R380S-216
41	Gear Head Planet Gear Assembly	
	for 119 ratio (3)	R38P-10
	for 151 ratio (2)	WBT380NL-A10
	for 188, 275 or 374 ratio	4E-10A
42	Planet Gear Bearing	8U-654
43	Rotor Pinion (for 119 ratio only)	R38P-17
44	Planet Gear Shaft (2)	8U-191
45	Gear Head Bearing	4E-510

RELEASED

M007 Series Parts List

Item	Part Description	Part Number
46	Gear Head Spacer	
	for 012, 015, 021, 027, 037 or 044 ratio	7AN-80
	for 119, 188, 275 or 374 ratio	R38P-80
47	Gear Head	
	for 012 ratio	M007-216-012
	for 015 ratio	M007-216-015
	for 021 ratio	M007-216-021
	for 027 ratio	M007-216-027
	for 037 ratio	M007-216-037
	for 044 ratio	M007-216-044
48	Gear Head Planet Gear Assembly (3)	
	for 012 or 015 ratio	M007-A10-003
	for 021 or 027 ratio	7AK-A10
	for 037 or 044 ratio	7AL-A10
49	Planet Gear Bearing (3)	
	for 012 or 015 ratio	7AH-500
	for 021, 027, 037 or 044 ratio	7AK 500

Item	Part Description	Part Number
	Gear Case Adapter (for 119, 151, 188, 275 or 374 ratio) (Includes Items 50 and 51)	M007-A100
50	Gear Case Adapter	M007-100
51	Gear Case Adapter Seal	M007-210
52	Auxiliary Gear Case Front Gasket (for 119, 151, 188, 275 or 374 ratio)	R1602-250
53	Auxiliary Gear Case Cap Screw (3) (for 119, 151, 188, 275 or 374 ratio)	510-638
54	Auxiliary Gear Case Lock Washer (3) (for 119, 151, 188, 275 or 374 ratio)	8U-58
	Flange Assembly (for 000, 004, 006, 009, 012, 015, 021, 027 or 044 ratio)	M007-A580
55	Flange	M007-580
56	Flange Seal	M007-210
57	Spindle Seal	M007-271
58	Flange Key (2)	M007-561
59	Spindle Key (for Round Keyed Spindles only)	
	for 063, 086, 119, 151, 188, 275 or 374 ratio	P25-150
	for all other ratios	501-410

Maintenance Section

Disassembly

NOTICE

Always disconnect the air supply before doing any maintenance on this Motor. Always use protective eyewear when performing maintenance on a tool or when operating a tool.

General Instructions

1. Do not disassemble the motor any further than necessary to replace or repair damaged parts.
2. Do not disassemble the motor unless you have a complete set of new gaskets and O-rings for replacement.
3. Do not remove any part which is a press fit in or on a subassembly unless the removal of that part is necessary for repairs or replacement.
4. Whenever grasping a motor or part in a vise, always use leather-covered or copper-covered vise jaws to protect the surface of the part or motor and help prevent distortion. This is particularly true of threaded members and housings.
5. The modular construction of the Series M007 Motors permits selective disassembly whereby gearing can be separated from the power unit and disassembled without removing the Multi–Vane® Motor from the Motor Housing, or the Multi–Vane® Motor can be removed and disassembled without removing the gear train from the gear chambers. This is especially true for the high torque ratios that use a Gear Case Adapter and Auxiliary Gear Case. Because of the modular construction, the steps in the following Disassembly Procedures can be sequentially changed to meet the particular situation.
6. When removing a Planet Gear Shaft, always support the rear (short hub end) of the Gear Head, Gear Frame or Spindle and press on the front end of the Shaft being removed. The shaft holes through the webs are slightly tapered so that the Shaft is a tighter fit in the front web.
7. Do not press any needle bearing from a part unless you have a new needle bearing on hand for installation. Needle bearings are always damaged during the removal process.

Disassembly of the Motor

1. Clamp a large adjustable wrench in vise jaws with the adjustable opening upward.
2. Adjust the jaw of the wrench to clear the body of the Gear Case (16).
3. Roll the Motor in the wrench jaw until it stops against the Gear Case Screw (23) and using a wrench on the flats of the Coupling Nut (24) at the motor end; loosen the Coupling Nut.
4. Roll the Motor in the opposite direction until it stops against the Grease Screw and using a wrench on the flats of the Coupling Nut at the flange end of the Gear Case, loosen the Coupling Nut.
5. Holding the Motor horizontally over a workbench, unscrew the Coupling Nut at the motor end of the Gear Case and pull the motor from the Gear Case. Do not lose the Flange Key (58).
6. For 000, 004, 006, 009, 012, 015, 021, 027, 037 or 044 ratio, **to remove the Flange** Assembly without removing the Spindle (17), unscrew the Coupling Nut and while pushing the Spindle inward, slide the Flange Assembly off the Spindle.

NOTICE

If the Spindle is removed, the entire gear train must be disassembled to install the Spindle Planet Gear Assemblies (19) or Gear Head Planet Gear Assemblies (48).

   a. Remove the Spindle Seal (57) from the Spindle. Remove the Flange Seal (56) from the inside of the Flange (55).
   b. Grasp the shaft of the Spindle and pull it from the Gear Case.
   c. Using snap ring pliers, remove the Spindle Retaining Ring (29) and pull the two Spindle Bearings (26) and the Spindle Bearing Spacer (27) from the shaft of the Spindle. Remove the second Spindle Retaining Ring.
7. **For 000 ratio,** pull the Spindle DrivePlate (18) from the Gear Case. **For 004 ratio,** pull the Rotor Pinion (21), Rotor Pinion Spacer (22) and the three Spindle Planet Gear Assemblies (19) from the Gear Case. **For 012 or 015 ratio,** pull the Rotor Pinion (21), Rotor Pinion Spacer, three Gear Head Planet Gear Assemblies (48), Gear Head (47) and Gear Head Spacer (46) from the Gear Case. **For 021,027,037 or 044 ratio,** pull the three Gear Head Planet Gear Assemblies (48), Gear Head (47) and Gear Head Spacer (46) from the Gear Case.
8. **For 063, 086, 119, 151, 188, 275 or 374 ratio,** loosen the Coupling Nut (24) at the front of the Gear Case (16) and separate the Gear Case from the Gear Case Adapter (50).
   a. Pull the Spindle (17) from the front of the Gear Case.
   b. **For 188 ratio,** pull the Rotor Pinion (21), Rotor Pinion Spacer (22) and Spindle Planet Gear Assembly (19) from the Gear Case.
   c. **For 063, 086, 119, 151, 275 or 374 ratio,** pull the Spindle Planet Gear Assembly (19) from the Gear Case.
   d. Using snap ring pliers, remove the Spindle Bearing Retaining Ring (29) and pull the two Spindle Bearings (26) and the Spindle Bearing Spacer (27) from the shaft of the Spindle. Remove the second Spindle Retaining Ring.
   e. Remove the Gear Case Adapter Seal (51) from the Gear Case Adapter (50).
   f. Remove the Auxiliary Gear Case Cap Screws (53) and Lock Washers (54) from the Auxiliary Gear Case and separate the Auxiliary Gear Case and components from Gear Case Adapter.
   g. Withdraw the Gear Head (40) and the assembled components from the rear of the Auxiliary Gear Case.
   h. Supporting the hub of the Gear Head, press on the front end of the Planet Gear Shaft to remove the Shaft and Planet Gears. **For 119 ratio,** remove the Rotor Pinion (43) from the Gear Head.

RELEASED

i. Using care to prevent unnecessary distortion, pry the Spindle Bearing Retainer (39) from the wall of the Auxiliary Gear Case and slide out the Spindle (33) and the assembled components.
j. Remove Gear Head Planet Gears if worn. See paragraph "h".

9. Using a thin blade screwdriver, pry one of the Coupling Nut Retainers (25) out of the groove in the Gear Case and slide the two Coupling Nuts off the Gear Case.
10. Grasp the shaft of the Rotor (6) in copper-covered vise jaws and pull the Motor Housing (1) off the assembled motor unit.
11. Pull the Front End Plate (11) off the Rotor.
12. Remove the Front Rotor Bearing Retainer (14), Rotor Bearing Housing Assembly (10), Front Rotor Bearing Spring Washers Front Rotor Bearing (12) and Front End Plate. Remove the Rotor Bearing Housing Seals (10A) from the Rotor Bearing Housing.
13. Push the Front Rotor Bearing out of the Front End Plate.
14. Separate Cylinder (8), Vanes (7) and Cylinder Dowel (9) from the Rotor. Remove the Rear End Plate Gasket from inside the Motor Housing.
15. Remove the Rear End Plate Retainer (2) and Rear End Plate (5) from the Rotor.

Assembly

General Instructions

1. Always use protective eyewear when performing maintenance on a tool or operating a tool.
2. Unless otherwise noted, always press on the stamped end of a needle bearing when installing the needle bearing in a recess.
3. Always press on the **inner** ring of a ball-type bearing when installing the bearing on a shaft.
4. Always press on the **outer** ring of a ball-type bearing when installing the bearing in a bearing recess.
5. Check every bearing for roughness. If an open bearing must be cleaned, wash it thoroughly in clean solvent and dry with a clean cloth. Sealed or shielded bearings should never be cleaned. Work grease thoroughly into every open bearing before installation.
6. Except for bearings, always clean every part and wipe every part with a thin film of oil before installation.
7. When grasping a Motor or one of its parts in a vise, always use leather or copper vise jaw covers to protect the surface of the part and reduce the likelihood of damage. This is particularly important when clamping threaded members, shafts with splines, etc.
8. Apply O-ring lubricant to each O-ring before assembly and use only new gaskets when reassembling the Motor.
9. When installing Planet Gears in a Spindle, Gear Head or Gear Frame, always support the front web and press in the shaft from rear to front. Shaft holes through the webs are slightly tapered so that shaft is tighter in front web. Always replace Planet Gears in sets.
10. Remember that the Rotor Pinion (43) used in the 119 ratio must be entered in the Gear Head (40) before the second Planet Gear (41) is installed.

Assembly of the Motor

1. Using a bearing inserting tool, press the Rear Rotor Bearing (3) into the recess in the rear of the Motor Housing (1).

NOTICE

Press on marked end of bearing only. Unmarked end of Bearing must be installed toward rear of Motor Housing.

2. Install Rear End Plate Gasket (4) in Motor Housing. Make certain all hubs and porting align.
3. Slide the Front End Plate (11), flat side first, over the splined end of the Rotor (6).
4. Using a sleeve that contacts only the inner ring of the Front Rotor Bearing (12), press the Front Rotor Bearing onto the splined hub of the Rotor until it seats against the Front End Plate.
5. The clearance between the Front End Plate and the Rotor is critical. While holding the Front End Plate, gently tap the splined end of the Rotor until you can insert a 0.001" feeler gauge or shim between the face of the Rotor and Front End Plate.
6. Grasp the splined end of the rotor in copper-covered vise jaws so that the short hub of the rotor is upward.
7. Wipe each Vane (7) with a film of light oil and place a Vane in each vane slot in the Rotor.
8. **For reversible models,** align the Cylinder Dowel hole in the Cylinder (8) with the hole in the Rear End Plate and install the Cylinder over the Rotor and Vanes against the End Plate.
   For nonreversible models, the installation of the Cylinder (8) determines the rotational direction of the motor. Looking past the rotor body and vanes, align the Cylinder Dowel hole in the Rear End Plate at twelve o'clock. There are five holes drilled crosswise into the Cylinder. Align the cylinder dowel hole in the Cylinder with the hole in the Rear End Plate and install the Cylinder over the Rotor and Vanes against the Rear End Plate. If the five drilled holes are at the three o'clock side of the assembly, the rotational direction will be forward (right hand). Rotational direction will be reverse (left hand), if the holes are at the nine o'clock side of the assembly. To change rotational direction, remove the Cylinder, turn it end for end and reposition it in the assembly. Nonreversible Cylinders have a 45 raised shoulder at one end of the five hole pattern. When the shoulder is near the Rear End Plate, rotation will be reverse; when near the Front End Plate, rotation will be forward.
9. Place the Rear End Plate (5), flat side first, over the short hub of the Rotor.
10. Install the Rear End Plate Retainer (2) in the groove in the Rotor hub.
11. Align the Cylinder Dowel holes in the Front End Plate, Cylinder and Rear End Plate and insert an Assembly Dowel (3/32" [2.5 mm] diameter by 9" [230 mm] long) into the aligned Dowel Holes in the assembly.
12. Inject 2 cc of the recommended grease into the central recess at the bottom of the bore in the Motor Housing (1).
13. **For reversible models,** insert the end of the Assembly Dowel nearest the Rear End Plate into the Dowel Hole at the bottom of the motor bore in the Housing. Slide the assembled motor along the Assembly Dowel until the motor stops against the bottom of the motor bore. Carefully withdraw the Assembly Dowel and install the Cylinder Dowel (9) in its place. Make certain the Dowel is below the face of the Front End Plate. **For nonreversible models,** insert the end of the Assembly Dowel nearest the Rear End Plate into one of the Dowel Holes at the bottom of the motor bore in the Housing. With the inlet Hole at twelve o'clock and the two Cylinder Dowel Holes at eleven and one o' clock respectively, inserting the Assembly Dowel in the one o'clock Hole will orient the motor for forward (right hand) rotation while inserting the Assembly Dowel in the eleven o' clock Hole will orient the motor for reverse (left hand) rotation. Slide the assembled motor along the Assembly Dowel until the motor stops against the bottom of the motor bore. Carefully withdraw the Assembly Dowel and install the Cylinder Dowel (9) in its place. Make certain the Dowel is below the face of the Front End Plate.
14. Install the Front Rotor Bearing Retainer (14) in the groove inside the Rotor Bearing Housing (10).
15. Install the two Rotor Bearing Housing Seals (10A) in the annular grooves around the Rotor Bearing Housing.
16. Place the two Front Rotor Bearing Spring Washers (13) inside the Front Rotor Baring Housing and against the Front Rotor Bearing Retainer.
17. Slide Front Rotor Bearing Housing over the Front Rotor Bearing.
18. Install a Coupling Nut Retainer (25) in one of the grooves encircling the Gear Case (16).
19. Position the non–threaded ends of the two Coupling Nuts (24) against each other and slide them onto the Gear Case from the end without the Retainer.
20. Install the second Retainer in the remaining groove encircling the Gear Case.
21. Using snap ring pliers, install one of the Spindle Retaining Rings (29) in the annular groove on the Spindle (17) adjacent to the large hub.
22. In the order named, install a Spindle Bearing (30), Spindle Bearing Spacer (27) and the remaining Spindle Bearing on the spindle shaft against the Spindle Retaining Ring. Secure the three parts by installing the remaining Ring in the groove on the shaft.
23. Insert the pin end of the Spindle into the unsplined end of the Gear Case and push the large spindle hub against the spline.

Assembly of the Gearing

1. If the Planet Gear Bearings (20 or 49) are being replaced in the Planet Gear Assemblies (19 or 48), use a bearing inserting tool similar to the one shown and press the Bearings into the Gears.

$$\text{Shoulder length} = \frac{\text{gear length - bearing length}}{2}$$

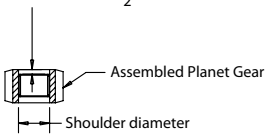

NOTICE

Always press on the stamped end of the Bearing and center the Bearing in the Gear.

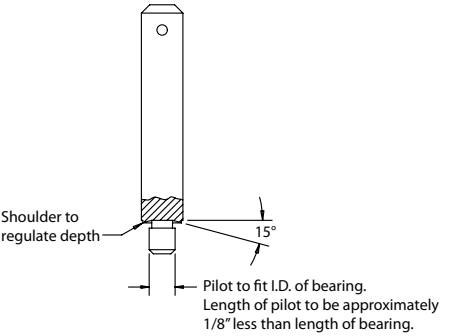

(Dwg. TPC488)

Needle Bearing Tool for Planet Gears

2. **For 004, 012, 015 or 188 ratio,** install the Rotor Pinion Spacer (22) and Rotor Pinion (21) on the Rotor (17). **For 000 ratio,** insert the Drive Plate (18) into the splined end of the Gear Case. Make certain the spindle pins enter the holes in the Drive Plate. For all other ratios, push a Spindle Planet Gear Bearing (20) into each Spindle Planet Gear (19) and using long tweezers, install a Bearing and Gear on each spindle gear shaft. **For 012, 015, 021, 037 or 044 ratio,** install the Gear Head Spacer (46) against the Spindle Planet Gears. Push a Planet Gear Bearing (49) into each Gear Head Planet Gear (48). Install the assembled Gear Head Planet Gears with Planet Gear Bearings on the Gear Head (47). Install the Gear Head with assembled components in the Gear Case.
3. Place the Motor Clamp Washer (15), concave end leading, against the Planet Gears or Drive Plate.
4. Being careful that the Spindle does not move out of position, engage the gear case gearing with the splined shaft of the Rotor.
5. Align the Gear Case with the Motor Housing by installing a Flange Key (58) to enter the notches in both the Housing and Gear Case. Hand tighten the Coupling Nut onto the Motor Housing.
6. Lubricate the Spindle Seal (5) with a thin coat of **Ingersoll Rand** No. 28 Grease and insert it, lip end trailing, into the threaded end of the Flange (55).
7. Insert the Flange Seal (56) into the groove inside the threaded end of the Flange.
   a. Being careful not to damage the Spindle Seal, install the Flange Assembly, threaded end first, over the **Spindle and** against the Gear Case.
   b. Align a notch in the Flange with a notch in the Gear Case and maintain the alignment byinstalling a Flange Key in the two notches.
   c. Thread the Coupling Nut onto the Flange until it is hand tight.
8. **For 063,086,119,151,188, 275 or 374 ratio,** install the Gear Case Adapter Seal (51) on Gear Case Adapter (50).
   a. Align a notch in the Gear Case Adapter with a notch in the Gear Case and maintain alignment by installing a Flange Key (58) in the notches.
9. Thread the Gear Case Grease Screw (28) into the Gear Case, if it was removed, and hand tighten it with a hex wrench.
10. Clamp a large adjustable wrench in vise jaws with the adjustable opening upward.
11. Adjust the jaw of the wrench to clear the body of the Gear Case.
12. Roll the Motor in the wrench jaw until it stops against the Gear Case Grease Screw and using a torque wrench on the flats of one Coupling Nut, tighten the Nut between 45 to 50 ft–lb (61 to 68 Nm) torque.
13. Roll the Motor in the opposite direction until it stops against the Gear Case Grease Screw and using a torque wrench on the fiats of the second Coupling Nut, tighten the Nut between 45 to 50 ft-lb (61 to 68 Nm) torque.
14. **For 063, 086, 119, 151, 188, 275 or 374 ratio,** install the Gear Head Bearing (45) in the recess in the Gear Case Adapter.
   a. **For 119 ratio,** install one Gear Head Planet Gear (41), one Planet Gear Bearing (42) and one Planet Gear Shaft (44) in the Gear Head (40). Install the Rotor Pinion (43) in the Gear Head and then install the remaining Planet Gears, Planet Gear Bearings and Planet Gear Shafts.
   b. Press the Rear Spindle Bearing (34) on the rear of the Spindle and Front Spindle Bearing (35) on the front of the Spindle.
   c. Install the Spindle Planet Gears (37), Spindle Planet Gear Bearings (38) and Spindle Planet Gear Shafts (39) on the Spindle.
   d. Install the assembled Spindle in the Auxiliary Gear Case (30) meshing the Spindle Planet Gears with the integral ring gear.
   e. Install the Spindle Bearing Retainer (39) in the annular groove in the wall of the Auxiliary Gear Case.
   f. Insert the Auxiliary Gear Case Cap Screws (53) and Lock Washers (54) in the holes in the Auxiliary Gear Case. Position the Auxiliary Gear Case Front Gasket (52) on the Cap Screws.
   g. Join the Auxiliary Gear Case and Gear Case Adapter, making sure that the splined end of the Spindle (17) meshes with the Gear Head Planet Gears **(151, 188, 275 or 374 ratio)** or slides into the Rotor Pinion (119 ratio). Secure Auxiliary Gear Case and Gear Case Adapter by tightening the Gear Case Adapter Cap Screws.

NOTICE

The rotor shaft must enter the Gear Head Planet Gears or Rotor Pinion without force and the Rotor and Gear Frame Planet Gears must turn freely without binding. The spline on the shaft of the Gear Head must enter the Spindle Planet Gears without force and the Gear Head and Spindle Planet Gears must turn freely without binding. Using a hand torque wrench, turn the output shaft. If the force required to turn the shaft exceeds 3-7 in-lb (.339 to .791 Nm) torque, the gearing is improperly installed and must be reassembled. See paragraphs "d" through 'g".

   h. Install the Grease Fitting (32) and Grease Fitting Washer (31) in the Auxiliary Gear Case.

RELEASED

Troubleshooting Guide

Trouble	Probable Cause	Solution
Motor will not operate.	Rotor shaft and Gear Frame Planet Gears (41) binding due to improper installation.	Using a hand torque wrench, turn the output shaft. If the force needed to turn the shaft exceeds 3-7 in lbs (.339 - .791 Nm), the gearing is improperly installed and must be reassembled. See paragraphs 14 (d)-14 (g) under Assembly of the Gearing.
	Spline in shaft of Gear Head (40) and Spindle Planet Gears binding due to improper installation.	Solution same as above.
Loss of power.	Low air pressure at Motor.	Check air supply. For top performance, the air pressure must be 90 psig (6.2 bar/620kPa) at the inlet.
	Worn Vanes.	Install a new set of Vanes (7).
	Damaged Rear End Plate Gasket.	Install a new Rear End Plate Gasket (4).
	Inadequate Motor lubrication.	Check air line lubricator. Refer to lubrication section for lubrication specifications.
	Worn or damaged parts.	Disassemble the Motor and examine parts. Replace any worn or damaged parts.
Motor heats up.	Inadequate lubrication.	Refer to **Lubrication** section
Gear Case Heats up.	Improper lubrication.	Refer to **Lubrication** section
Grease leakage.	Too much grease in the Gear Case.	Refer to **Lubrication** section

RELEASED

www.ingersollrandproducts.com

© 2012 ***Ingersoll-Rand*** *Company*

Ingersoll Rand