Form P6231
03526639
Edition 8
December 2013

Multi-Vane Motors

Series 92RM and 992RM

Operation and Maintenance Information

Save These Instructions

Ingersoll Rand®

WARNING

General Product Safety Information

- **Read and understand this manual before operating this product.**
- **It is your responsibility to make this safety information available to others that will operate this product.**
- **Failure to observe the following warnings could result in injury.**

WARNING

- Always operate, inspect and maintain this motor in accordance with American National Standards Institute Safety Code for Portable Air Tools (ANSI B186.1).
- For safety,top performance and maximum durability of parts, operate this motor at 90 psig (6.2 bar/620 kPa) air pressure at the inlet with 1 1/4" (32 mm) air supply hose.
- Always turn off the air supply and disconnect the air supply hose before installing, removing or adjusting any accessory on this motor or before performing any maintenance on this motor.
- Keep hands, loose clothing and long hair away from rotating end of motor.
- Anticipate and be alert for sudden changes in motion during start up and operation of any motor.
- Motor shaft may continue to rotate briefly after throttle is released.
- Do not lubricate motor with flammable or volatile liquids such as kerosene, diesel or jet fuel.
- Do not remove any labels. Replace any damaged label.
- Use accessories recommended by **Ingersoll Rand**.
- This motor is not designed for working in explosive atmospheres.
- This motor is not insulated against electric shock.
- Series 92RMG and Series 992RMG Motors are designed for gas operation. They are not totally sealed in dynamic operation since the exhaust must be vented or piped away and there is a possibility of leakage around the output shaft when rotating. Caution should be taken when operating these motors on gas because of the danger of fire, explosion, or inhalation.
- Motors for operation on compressed gas incorporate special sealing to prevent gas leakage. This includes a Cylinder Seal (9) at each end of the Motor Housing (12), and an O-ring type Gear Case Cover Seal (14) located in a groove in the Gear Case (13). Gas operated Motors also use a special Drive Shaft Grease Seal (20); never use a substitute Seal. A Drive Shaft Grease Seal is included in the Gear Case Cover Assembly (19); therefore, be sure to use the proper Assembly as listed in the part list section.
- Motors for gas operation can be operated with compressed air, but Motors for air operation must never be operated with gas unless completely converted by the installation of the Cylinder Seals (9), Gear Case Cover Seal (14) and special Drive Shaft Grease Seal Part No. 150RMG14-271.
- When installing one of these Motors for operation on compressed air, refer to the schematic diagram Drawing TPB-491.

NOTICE

- The use of other than genuine **Ingersoll Rand** replacement parts may result in safety hazards, decreased tool performance and increased maintenance, and may invalidate all warranties.
- **Ingersoll Rand** is not responsible for customer modification of tools for applications on which **Ingersoll Rand** was not consulted.
- Repairs should be made only by authorized, trained personnel. Consult your nearest **Ingersoll Rand** Authorized Service Center.
- It is the responsibility of the employer to place the information in this manual into the hands of the operator.

Safety Symbol Identification

Wear Respiratory Protection

Wear Eye Protection

Wear Hearing Protection

Read Manuals Before Operating Product

(Dwg. MHP2598)

Safety Information - Explanation of Safety Signal Words

DANGER	Indicates an imminently hazardous situation which, if not avoided, will result in death or serious injury.
WARNING	Indicates a potentially hazardous situation which, if not avoided, could result in death or serious injury.
CAUTION	Indicates a potentially hazardous situation which, if not avoided, may result in minor or moderate injury or property damage.
NOTICE	Indicates information or a company policy that relates directly or indirectly to the safety of personnel or protection of property.

Placing the Motor In Service

Models 92RM1 and 92RM2 are identical except for the direction of rotation of the Drive Shaft; likewise Models 92RMG1 and 92RMG2. The direction of rotation is determined by the position of the Cylinder (8), and can be changed by removing the Cylinder and turning it end for end.

Models 92RM1, 92RMG1, 92RMG10, 992RM1 and 992RMG1 are assembled at the factory so that the Drive Shaft rotates **clockwise** when facing its output end; Models 92RM2 and 92RMG2 are assembled for **counterclockwise** rotation.

Lubrication

Always use an air line lubricator with this Motor. We recommend **Ingersoll Rand** No. NFLU-16 Filter Lubricator Unit. For temperatures above 30° F, use SAE 20 motor oil. For temperatures below 30° F, use SAE 10 or 10W motor oil. Set the lubricator valve to a medium feed or approximately 60 drops per minute.

After each 200 hours of operation, lubricate the gears and bearings with **Ingersoll Rand** Lubricant No. 28, or a good quality No. 2 cup grease. Disassemble the Motor for lubrication as instructed in the Maintenance Section beginning on page 6.

Reversible Motor Applications Air Flow Information

Important: When these motors are used on applications requiring a reversible motor, a 4-way throttle valve or two 3-way throttle valves must be used in the air supply line in accordance with the following schematic diagram. When the application requires a non-reversible motor, a 2-way inline valve can be used in the air supply line. In either case, the inlet and outlet of the valve must be equal in size, and preferably one size larger, than the inlet of the motor.

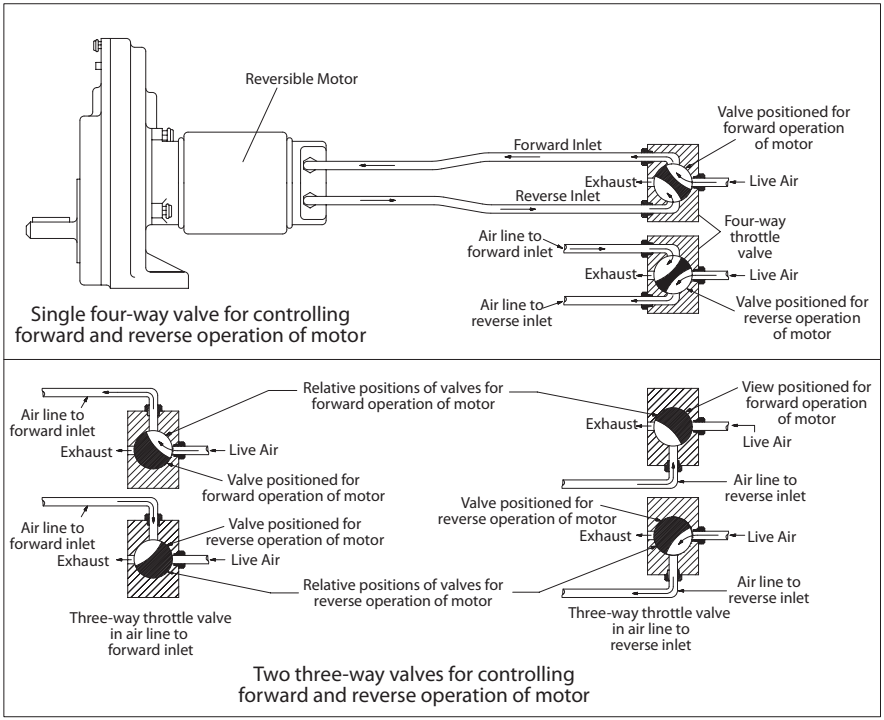

(Dwg. TPB491)

WARNING

Motors powered by compressed gas must have the exhaust vented or piped away.

Series 92RM and 992RM Multi-Vane Air Motors - Exploded Diagram

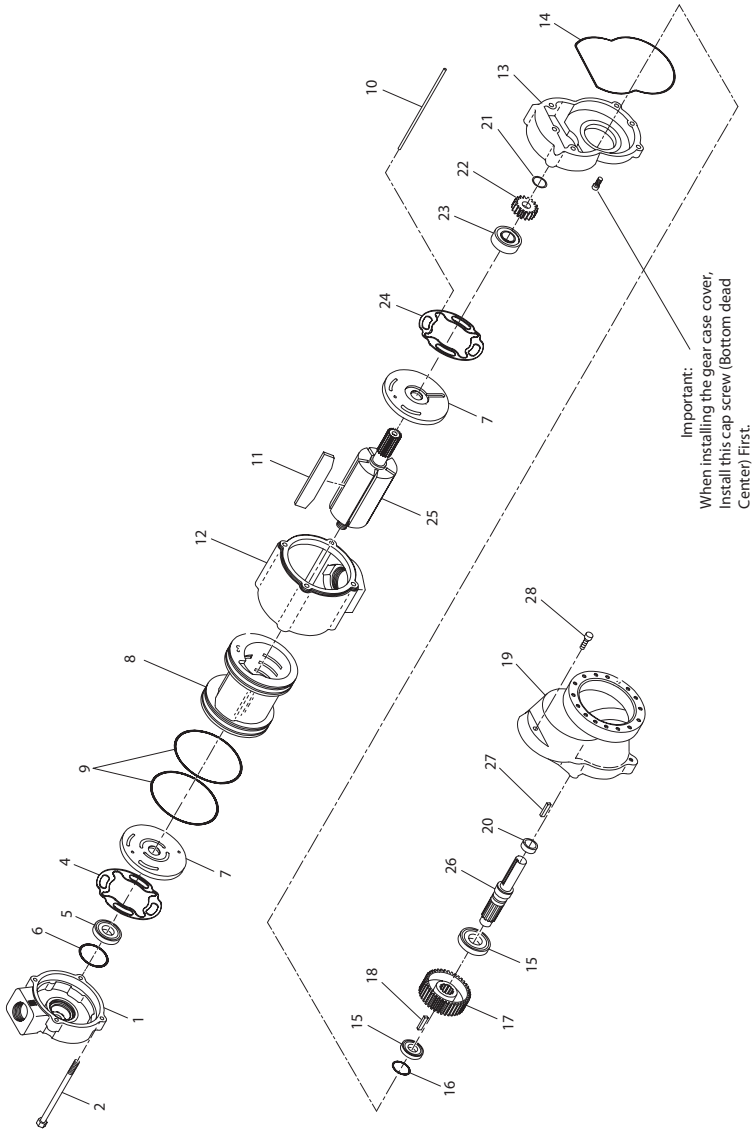

(Dwg. TPB474-1)

Series 92RM and 992RM Multi-Vane Air Motors - Parts List

Item	Part Description	Part Number
1	Motor Housing Cover	
	for 92RMG10	92RMG10-102
	for 92RM1, 92RMG1, 92RM2, 92RMG2	92N-102
	for 992RM1, or 992RMG1	92R-102
2	Motor Housing Cover Short Bolt (2 for 992RM1 or 992RMG1; 4 for others) (3/8-16 thd. x 5-1/2" lg.)	12BMP-634
*	Motor Housing Cover Long Bolt (2) (for 992RM1 or 992RMG1) (3/8-16 thd. x 6-1/2" lg.)	107-25
*	Cap Screw Lock Washer (4) (Copper)	D02-504
• 4	Motor Housing Cover Gasket	92R-283
• 5	Rear Rotor Bearing	92RMG10-22
6	Rear Rotor Bearing Retainer	R380Q-6
7	End Plate (2)	92RMG10-11
8	Cylinder	
	for 92RM1 or 92RM2	92RMG10-3
	for 992RM1	92R-3
8	Cylinder Assembly	
	for 92RMG10, 92RMG1, or 92RMG2	92RMG10-K3
	for 992RMG1	92R-A3
• 9	Cylinder Seal (2)	92RMG10-103
10	Cylinder Dowel	
	for 92RMG10	205-1098
	for all other models	92R-98
• 11	Vane Packet (Set of 5 Vanes)	R5H-42-5
12	Motor Housing	
	for 92RMG10	92RMG10-40
	for all other models	92N-40
13	Gear Case (for 92RM1, 92RM2 or 992RM1)	92RMG10-37

Item	Part Description	Part Number
13	Gear Case Assembly (for 92RMG10, 92RMG1, 92RMG2 or 992RMG1)	92RMG10-A37
• 14	Gear Case Cover Seal	92RMG10-607
• 15	Drive Shaft Bearing (2)	T02-33
16	Drive Shaft Retainer	R380Q-6
17	Drive Gear	92RMG10-9
18	Drive Gear Key	10BM-610
19	Gear Case Cover Assembly	92RMG10-A478
• 20	Drive Shaft Grease Seal	
	for 92RM1, 92RM2 or 992RM1	150BMP-271
	for 92RMG10, 92RMG1, 92RMG2 or 992RMG1	150RMG14-271
21	Rotor Pinion Retainer	10BM-69
22	Rotor Pinion	101BMPD-17
• 23	Front Rotor Bearing	10BM-24
• 24	Gear Case Gasket	92R-283
• 25	Rotor	92RMG10-53
26	Drive Shaft	
	Long (1.984"; 50 mm to shoulder)	92RM1-8
	Short (1.250"; 32 mm to shoulder)	92RMG10-8
27	Drive Shaft Key	
	for 92RM1-8 Drive Shaft	107-54
	for 92RMG10-8 Drive Shaft	205-61
28	Gear Case Cover Cap Screw (8)	510-638
• 29	Lockwasher (8)	8U-58

* Not illustrated.

• To keep downtime to a minimum, it is desirable to have on hand certain repair parts. We recommend that you stock one (pair or set) of each part indicated by a bullet (•) for every four motors in service.

Maintenance

Lubrication of the Motor

WARNING

For gas operated motors, do not disassemble unless you have one Drive Shaft Grease Seal (20) on hand.

1. Remove the Gear Case Cover Cap Screws (28).
2. Grasp the Drive Shaft (26) and, as a unit, withdraw the Drive Shaft and Gear Case Cover.
3. Work some grease into both Drive Shaft Bearings (15) and the Front Rotor Bearing (23). Coat the teeth on the Drive Gear (17) and Rotor Pinion (22) with grease. Use grease sparingly. About one oz (30 cc) of grease should be sufficient for these members.
4. Replace the Drive Shaft Grease Seal. Grease the inside of the seal.
5. Replace the Gear Case Cover and Drive Shaft, and install the Gear Case Cover Cap Screws. Alternately tighten the Cap Screws between 8 and 10 ft-lb. (11.0 and 14.0 Nm) torque.

WARNING

For gas operated Motors, do not disassemble further unless you have two new Cylinder Seals (9) on hand.

5. Unscrew the Housing Cover Cap Screws (2) and withdraw the Motor Housing Cover (1). Try not to separate the joint between the Housing and Gear Case and do not change the location of the Housing relative to the Cylinder.
6. Work some grease into the Rear Rotor Bearings (5).
7. If you separate the Motor Housing from the Gear Case, or changed the location of the Housing relative to the Cylinder, carefully inspect the Cylinder Seals (9). If the Seals appear damaged in any respect, install new Seals.
8. Replace the Motor Housing Cover and install the Housing Cover Cap Screws. Alternately tighten the Screws between 28 and 31 ft-lb. (37.9 and 42.0 Nm) torque.
9. Check the Motor for leaks by plugging the exhaust port and admitting 30 to 40 psig (200 to 280 kPa) of compressed air in the inlet. Submerge the Motor Housing and check for bubbles.
10. If the Motor leaks, check the tightness of the Housing Cover Cap Screws. If this does not correct the trouble, install new Cylinder Seals (9).

Disassembly

General Instructions

1. Do not disassemble the motor any further than necessary to replace or repair damaged parts.
2. Do not press any needle bearing from a part unless you have a new needle bearing on hand for installation. Needle bearings are always damaged during the removal process.
3. When grasping a tool in a vise, always use leather- covered or copper-covered vise jaws to protect the surface of the part or motor and help prevent distortion. This is particularly true of threaded members and housings.
4. Do not remove any part which is a press fit in or on a subassembly unless the removal of that part is necessary for repairs or replacement.

Disassembly of the Motor

WARNING

For gas operated motors, do not disassemble unless you have one Drive Shaft Grease Seal (20) on hand.

1. Remove the Gear Case Cover Cap Screws (28).
2. Grasp the Drive Shaft (26) and, as a unit, withdraw the Drive Shaft and Gear Case Cover (19).
3. Remove the Drive Shaft Key (27) and push the assembled Drive Shaft out the motor end of the Gear Case cover.
4. Using snap ring pliers, remove the Drive Shaft Retainer (16) and pull the Drive Shaft Bearing (15) and Drive Gear (17) off the Drive Shaft.
5. Remove the Drive Gear Key (18) from the slot in the Drive Shaft and pull the remaining Drive Shaft Bearing off the Drive Shaft.
6. Pull the Drive Shaft Grease Seal (20) out of the Gear Case Cover.
7. For gas operated Motors, if the Gear case Cover Seal (14) is nicked or damaged, pull it out of the groove in the Gear Case (13).

WARNING

For gas operated Motors, make certain you have two new Cylinder Seals (9) on hand before proceeding with the disassembly.

NOTICE

When removing the Motor Housing Cover (1) in the next step, it is important to note the orientation of the End Plate (7) and Cylinder (8) in relation to the cylinder dowel hole in the Motor Housing Cover in order to maintain the desired motor rotation.

8. Unscrew the Housing Cover Cap Screws (2) and withdraw the Motor Housing Cover (1).
9. Remove the Gear Case from the output end of the Motor Housing (12).
10. Grasp the geared end of the Rotor (25) and pull the assembled motor out of the Motor Housing.
11. Using a thin blade screwdriver, pry the Rotor Pinion Retainer (21) out of the groove on the rotor shaft and pull the Rotor Pinion (22), Front Rotor Bearing (23) and Front End Plate (7) off the hub of the Rotor.
12. Remove the Gear Case Gasket (24) from the End Plate or Gear Case.
13. Pull the Cylinder (8) and Cylinder Dowel (10) off the Rotor and remove the Vanes (11) from the vane slots in the Rotor.
14. **For gas operated Motors**, remove the two Cylinder Seals (9) from the grooves in the large flanges of the Cylinder.
15. Using snap ring pliers, remove the Rear Rotor Bearing Retainer (6) and pull the Rear Rotor Bearing (5) and End Plate off the rear hub of the Rotor.
16. Remove the Motor Housing Cover Gasket (4) from the End Plate or Motor Housing Cover.

Assembly

General Instructions

1. Always press on the **inner** ring of a ball-type bearing when installing the bearing on a shaft.
2. Always press on the **outer** ring of a ball-type bearing when pressing the bearing into a bearing recess.
3. Whenever grasping a tool or part in a vise, always use leather-covered or copper-covered vise jaws. Take extra care not to damage threads or distort housings.
4. Except for bearings, clean every part and wipe every part with a thin film of oil before installation.
5. Check every bearing for roughness. If an open bearing must be cleaned, wash it thoroughly clean suitable solution and dry with a clean cloth. Sealed or shielded bearings should not be cleaned. Work grease into every bearing before installation.
6. Apply a film of O-ring lubricant to every O-ring before installation.

Motor Assembly

After lubricating the motor, assemble the motor as follows:

1. Slip one End Plate (7), the side with the channel going from the central opening toward the outer edge trailing, onto the spline end of the Rotor (25).

2. Slide the Front Rotor Bearing (23) onto the splined hub of the Rotor and against the End Plate.
3. Slide the Rotor Pinion (22) onto the splined end of the Rotor and retain it with the Rotor Pinion Retainer (21).
4. While holding the Rotor in a vertical position, grasp the Rotor Pinion in copper-covered vise jaws.
5. Place a Vane (11) in each vane slot.
6. For gas operated Motors, if the Cylinder Seals (9) are nicked or damaged, install new Seals in the grooves in the large hubs of the Cylinder.
7. The direction of rotation of the Motor depends on the relationship of the Cylinder and End Plates. To obtain desired shaft rotation, proceed as follows:
   a. Rotate the End Plate until the 17/64" (6.75 mm) through hole (dowel hole) is facing you. Note there is a similar hole extending lengthwise through the Cylinder (8), and at about 40° to one side of the hole is an air port.
   b. Hold the Cylinder upright, facing the dowel hole and with the air port to the **right** for **clockwise** shaft rotation, to the **left** for **counterclockwise** shaft rotation. Then place it over the Rotor so that the dowel hole in the Cylinder and End Plate are in alignment.
8. Slide the other End Plate, the side with the channel going from the central opening toward the outer edge trailing, onto the short hub of the Rotor. Rotate it so that the cylinder dowel hole is aligned with the corresponding hole in the Cylinder. Install the Cylinder Dowel (10) to maintain the alignment.
9. Slide the Rear Rotor Bearing (5) on the short hub of the Rotor and against the End Plate. Using snap ring pliers, install the Rear Rotor Bearing Retainer (6) to keep the Bearing and End Plate in position.
10. Slide one Drive Shaft Bearing (15) onto the end of the Drive Shaft (26) with the spline and move the Bearing forward until it stops against the shoulder on the Shaft.
11. Insert the Drive Gear Key (18) into the slot in the spline portion of the Shaft and slide the Drive Gear (17) onto the Shaft so that it engages the spline and Key.
12. Slide the remaining Drive Shaft Bearing onto the Shaft against the Gear and using snap ring pliers, install the Drive Shaft Retainer (16) in the groove on the Drive Shaft.
13. Examine the slot in the output end of the Drive Shaft and if it is dubbed or burred, stone the edges sharp and smooth.
14. Install a new Drive Shaft Grease Seal (20),open end trailing, into the recess in the Gear Case Cover. Grease the inside of the Drive Shaft Grease Seal.
15. If the Gear Case Cover Seal (14) was removed, work a new one into the groove in the face of the Gear Case (13).
16. Carefully work the output end of the Drive Shaft through the Grease Seal and push the assembly into the Gear Case Cover until the leading Drive Shaft Bearing bottoms in the bearing recess.
17. Position the assembled Gear Case Cover and Drive Shaft against the Gear Case and install the Gear Case Cover Cap Screws (28). Alternately tighten the Cap Screws to 9 ft-lb. (12 Nm) torque.
18. Position the Motor Housing Cover Gasket (4) against the face of the End Plate of the assembled motor being held in the vise jaws. Make certain the Cylinder Dowel and Gasket are properly aligned.
19. Position the Motor Housing Cover (1) over the Rear Rotor Bearing and End Plate. Make certain the cylinder dowel holes and porting are aligned correctly. Remove the assembly from the vise jaws.
20. Carefully slide the Motor Housing (12) over the assembled motor and position it against the Motor Housing Cover.
21. Position the Gear Case Gasket (24) against the face of the End Plate. Make certain the Cylinder Dowel and Gasket are properly aligned.
22. Position the assembled Gear Case and Gear Case Cover against the face of the Motor Housing. Make certain the Rotor Pinion engages the Drive Gear properly.
23. Install the Housing Cover Cap Screws (2). Alternately tighten the Screws between 28 and 31 ft-lb. (37.9 and 42.0 Nm) torque.
24. Check the Motor for leaks by plugging the exhaust port and admitting 30 to 40 psig (200 to 280 kPa) of compressed air in the inlet. Submerge the Motor Housing and check for bubbles.
25. If the Motor leaks, check the tightness of the Housing Cover Cap Screws. If this does not correct the trouble, install new Cylinder Seals (9).

NOTICE

Save these instructions. Do not Destroy.

ingersollrandproducts.com

© 2013 Ingersoll-Rand